User and maintenance manual

CORN HEAD

olimac

Contents

Section 1 – Introduction

To the Owner/Operator:

OLIMAC SRL wants to thank you for purchasing a Drago GT Corn Head. Before starting harvest, please read and understand this manual carefully to learn how to operate and service your corn head correctly. Failure to do so could result in personal injury or equipment damage. If any portion of this manual is not understood, please call *OLIMAC SRL*.

This manual should be considered a permanent part of your corn head and should remain with the corn head.

Measurements are given in both metric and customary US unit equivalents. Use only original replacement parts including fasteners. Metric and inch fasteners may require a specific metric or inch wrench.

Right-hand and left-hand sides are determined by facing in the direction the implement will travel when going forward.

Warranty is provided as part of *OLIMAC SRL* support program for customers who operate and maintain their corn head as described in this manual. *OLIMAC SRL* warranty assures that *OLIMAC SRL* will warrant its product when manufacturing defects appear within the warranty period. Should the equipment be abused, or modified to change its performance, beyond the original factory specifications, without prior approval from *OLIMAC SRL*, the warranty will become void. Use of non *OLIMAC SRL* approved lubricants will void the warranty.

Write product identification numbers in the appropriate section below. You will need these numbers when ordering parts or submitting warranty claims.

Model Number: _____

Serial Number: _____

Type of Combine: _____

Date of Purchase: _____

Section 2 - Corn Head Safety

Since the equipment - corn head - named "Drago GT" has features that involve a significant degree of dangerousness due to the nature of the harvesting system, the operator and any people standing within the operating range of the equipment must take into utmost account the recommendations described in this manual, as well as those included in the Operator's Manual of the combine.

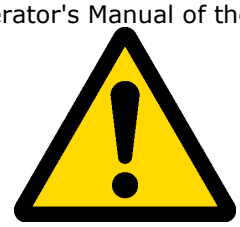

Before working with the corn head read carefully and thoroughly this manual, the manual of the PTO drive shafts supplied with the equipment and the Operator's Manual of the combine.

Through this manual you will acquire all the information regarding the general characteristics of the equipment needed to train personnel on safe handling.
Important: Please note the decals placed in visible positions on the equipment that detect dangerous items and behaviors that are recommended for your safety (danger-warning–caution) followed by specific instructions. These recommendations are intended to achieve the protection of the personal safety of the operator and those who work with you. Before using the equipment it is necessary to read and understand these contents.

Based on the activities you are going to perform while using this equipment, wear the appropriate PPE. In particular, the following are recommended:

PPE	WHEN
Safety footwear	Always
Gloves	Always
Eye protection	For maintenance, adjustment and lubrication
Helmet	During handling operations, for loading and unloading and during any activity which require the operator stays under the equipment.
Ear protectors	During the operation of the machine.
Dress appropriately, not baggy garments or with loose parts that may get caught/dragged by the moving parts of the machine.	Always

Keep efficient emergency signs attached to the corn head. Replace lost or damaged signs. Make sure that the new components on the equipment and the spare parts include the decals available at your local OLIMAC dealer.

Learn how to use the machine and how to use the controls properly.
Do not let anyone operate without having been properly informed, educated and trained in the use of the corn head.

Keep your equipment in proper working conditions. Unauthorized to the machine may impair the functions and/or safety and have a negative impact on the efficiency thereof.

If you are not sure or you do not understand any part of this manual, before taking any action seek assistance and please contact your nearest OLIMAC dealer.

Keep your corn head in good working condition. Unauthorized modifications may damage the safety functions and affect the equipment life/warranty.

FAILURE TO FOLLOW THE INSTRUCTIONS CONTAINED IN THIS MANUAL

COULD RESULT IN SERIOUS INJURIES

AVOID BEING CAUGHT:

To avoid being caught:

- No activity or operation must be conducted with staff in the vicinity of the head when it is operating.
- The personnel should not wear clothing unsuitable for work such as belts or parts of loose or fluttering fabric.
- It is strictly forbidden to attempt to intervene with temporary non-dedicated tools during normal operation of the machine or to resolve anomalies.
- Any operation, also unclogging the head, must be carried out when the machine is stopped and powered down as described in the following chapters.

Failure to follow instructions could be fatal since the harvesting system is aggressive in nature.

When being caught, you must:

- Secure the machine by removing and by disconnecting from any source of energy;
- as appropriate, disassemble and remove the parts that cause entanglement or manually operate the rotation of the moving parts in the reverse, making sure, beforehand, to avoid further injury.

2.1 – Follow All Safety Instructions

Carefully read all safety messages in this manual and on your corn head safety decals. Keep all decals in good condition. Replace any missing or damaged decals. Be sure new components/equipment and repair parts include the current safety decals. Replacement safety decals are available from your Authorized Drago dealer.

Learn how to operate the corn head and how to use controls properly. Do not let anyone operate without instruction.

Keep your corn head in proper working condition. Unauthorized modifications to the corn head may impair the function and/or safety and affect machine life/warranty.

If you do not understand any part of this manual and need assistance, contact your Authorized Drago dealer or *OLIMAC SRL.*

2.2 – Understanding Signal Words

Throughout this manual and on corn head decals you will find precautionary statements, including the following safety alert symbols. Danger and Warning safety signs are located near specific hazards. General precautions are listed on the Caution safety signs.

This is a safety-alert symbol. When you see this symbol on your machine or in this manual, be alert to the potential for personal injury.

This is an important information symbol. When you see this symbol in this manual it is calling attention to important safety or adjustment procedures.

Follow recommended precautions and safe operating practices.

DANGER indicates an immediate hazardous situation that, if not avoided, will result in serious injury or death. The color associated with danger is red**.**

WARNING indicates a potentially hazardous situation that, if not avoided, could result in serious injury or death. The color associated with warning is orange.

CAUTION indicates a potentially hazardous situation that, if not avoided, may result in minor or moderate injury. It may also be used to alert against unsafe practices. The color associated with caution is yellow.

Failure to follow the Danger, Warning and Caution instructions may result in serious bodily injury or death.

2.3 – Operating Safety Precautions

Before operating this corn head, thoroughly read and understand this manual, as well as your Combine Operators Manual. Make all information available contained therein to those working with you and/or for you.

1) Before start-up, check corn head for operational and traffic safety tips.
2) Ensure everyone is clear of the combine before starting.
3) Pay attention to all local safety regulations in addition to the recommendations made in this operator's manual.
4) **Before starting work, get familiar with all devices and their functions**.
5) The combine should always be equipped with sufficient rear axle weight for safe operation. Under some field conditions, more weight may be required at the rear axle for adequate stability. See Table 9.1 for corn head weight and the Combine Operators Manual for required ballasting. For any corn heads not listed in Table 9.1 call *OLIMAC SRL*.
6) Pay attention to permissible axle loads and total weights.
7) The mounted corn head influences speed, steering and braking capability – observe sufficient steering and braking capability.
8) Only allow passengers on the combine for brief periods for training or observation only.
9) Keep all safety shields in place. Failure to do so may result in serious injury or death.
10) Never wear loose fitting clothing that might catch on moving parts while working around the corn head or combine.

2.4 – Maintenance Safety Precautions



Before performing any repairs or maintenance on the combine or corn head:

1) Lower the corn head to the ground or raise the corn head completely and lower the feeder house lift cylinder safety stops.
2) Engage the parking brake.
3) Shut off the combine engine and remove key.
4) Disconnect corn head drive shafts.
5) Hang a "Do Not Operate" tag in the operator's station.
6) If the corn head should become plugged, stop the combine and engine before removing the obstruction. Failure to do so could result in serious injury or death.

Before performing any lubrication or adjustment to the combine or corn head:

1) Lower the corn head to the ground or raise the corn head completely and lower the cylinder safety stops.
2) Engage the parking brake.
3) Shut off the combine engine and remove the key.
4) Disconnect corn head drive shafts.
5) Hang a "Do Not Operate" tag in the operator's station.

Avoid High Pressure Fluids

1) Lower the corn head to the ground or raise the corn head completely and lower the cylinder safety stops.
2) Always release all hydraulic pressure prior to opening the system. Failure to do so may result in a hydraulic injection injury.
3) Inspect all hoses for damage or wear at least once per season. If any hoses show signs of wear or failure replace immediately.
4) To inspect for leaks use a piece of card board, never use hands. If an accident occurs, contact a hand surgeon or specialist familiar with injection injuries immediately. Do not contact a general practitioner. Any fluid injected into the skin must be surgically removed within a few hours or gangrene may result.

Do Not Feed Material by Hand


To avoid entanglement, do not feed crop material into the corn head by hand, or attempt to manually unplug the corn head while it is running. The stalk rollers can feed the crop material in faster than you can release your grip on the material.

Avoid Hearing Loss

Prolonged exposure to loud noise can cause hearing impairment or loss of hearing. Wear a suitable protective hearing device such as earmuffs or earplugs to guard against objectionable or uncomfortable loud noise.

Avoid Rotating Components

Pay attention to the corn head when in motion. Stalk rollers of the corn head, etc. cannot be completely shielded due to their movement. **Always stay clear of these moving parts during operation.**

Remove paint before welding or heating to avoid toxic fumes and dust.


1) Disconnect all batteries prior to welding.
2) Work only in well-ventilated areas.
3) Remove paint to a minimum distance of 3” (76mm) away from the area to be effected by heating.
4) If you must sand or grind, avoid breathing the dust. Wear an approved respirator.
5) If using solvent or paint stripper, remove the stripper with soap and water before welding. Never use chlorinated brake cleaner before welding.
6) Remove all aerosols, combustible fluids and any other flammable material from the work area. Allow fumes to disperse at least 15 minutes before welding or heating.
7) Keep all hydraulic lines and oil reservoirs away from the work area while using heat. Failure to do so can rupture lines causing pressurized fluids to ignite.
8) Dispose of paint and solvents safely.

IMPORTANT: Use only original spare parts.

When ordering spare parts, refer to the type and serial number of your corn head.

Corn Head Identification :

The serial number is printed on the identification plate located on the upper right side of the frame. You should communicate the information shown on it whenever it is necessary to order spare parts.

SERIAL N. ……

TYPE OF MT……

DATE OF PURCHASE……

ENHANCEMENT

OLIMAC SRL is constantly working to improve and develop its product.
OLIMAC SRL reserves the right to make improvements or changes when it becomes practical and possible to do so, without incurring any obligation to make changes or additions to the equipment sold previously.

2.5 – Safety Decal Locations

The following decals have been placed on the corn head as shown in the pictures on the following pages. They are intended to ensure personal safety and to prevent dangerous working practices. Please take this manual, walk around the corn head and note the contents of the safety signs. Re-examine its contents with all operators and workers along with instructions on proper use of the equipment.

Keep decals clean and readable. If one or more of them are damaged or missing, replace and move to other positions.

The signs (decals) express the degree of attention that should be kept by the operator.

DANGER

It indicates an immediate hazardous situation that, in not avoided, will result in death of serious injury. The color associated with DANGER is RED.

WARNING

It indicates a specific behavior that should be avoided and that may be dangerous and may result in death or serious injury. The color associated with WARNING is ORANGE.

CAUTION

It indicates a recommended behavior that, if failed to be performed, could result in a danger. It is also used to alert against unsafe working practices and usage. The color associated with CAUTION is YELLOW.

The safety decals below must be placed on your equipment within the specified space for your personal safety and for those who work with you.
Please take this manual, walk around the corn head and note its contents.
Review the decals and instructions in this manual with your hear operator.
Keep decals clean and readable. Should decals be missing on their specific parts of reference, get new copies from your OLIMAC dealer.

2.5.1 – Rigid Corn Head Safety Decal Locations

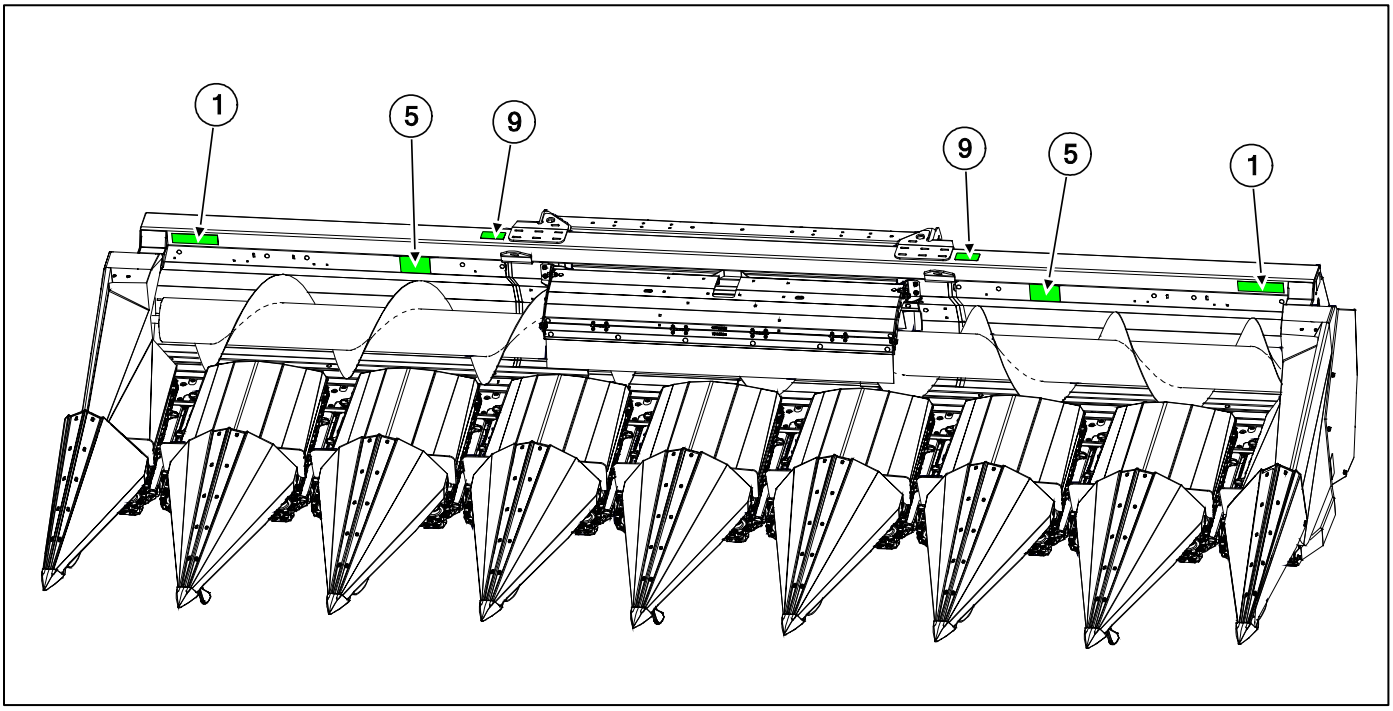

Rigid Head – Front View

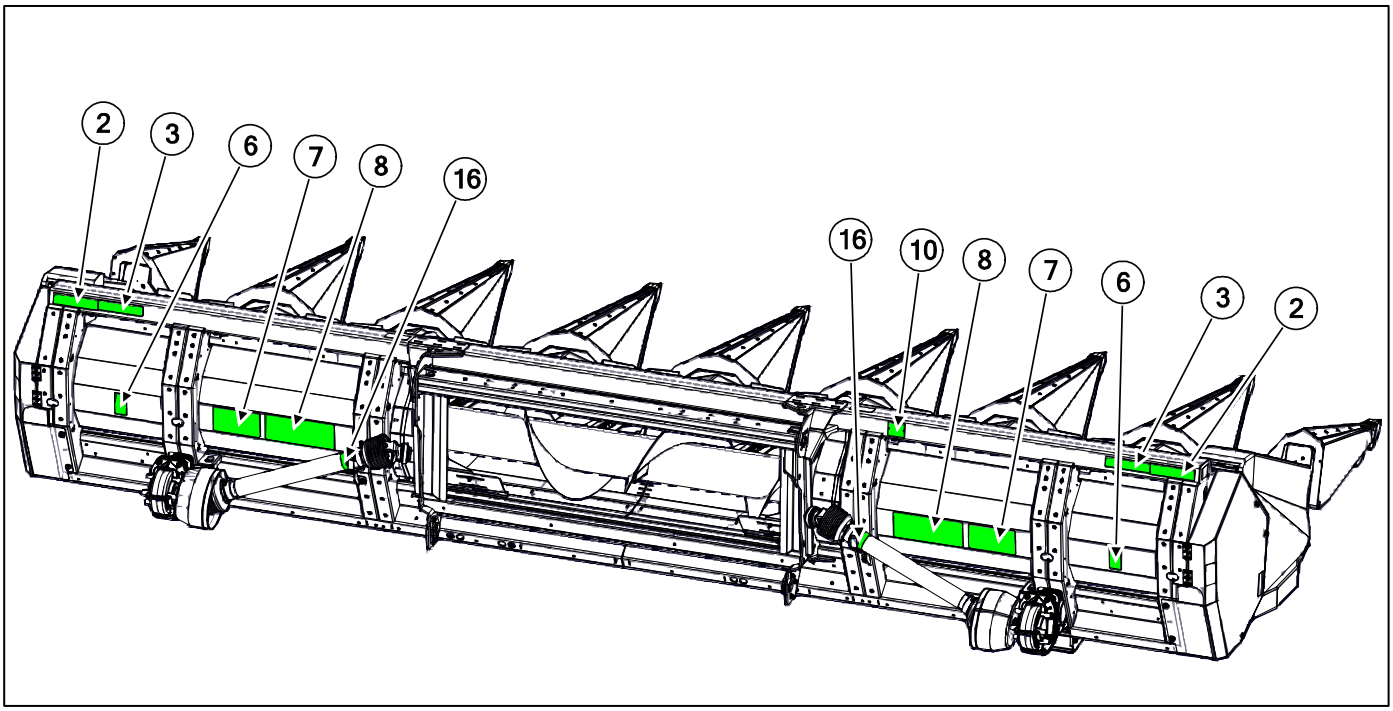

Rigid Head – Rear View

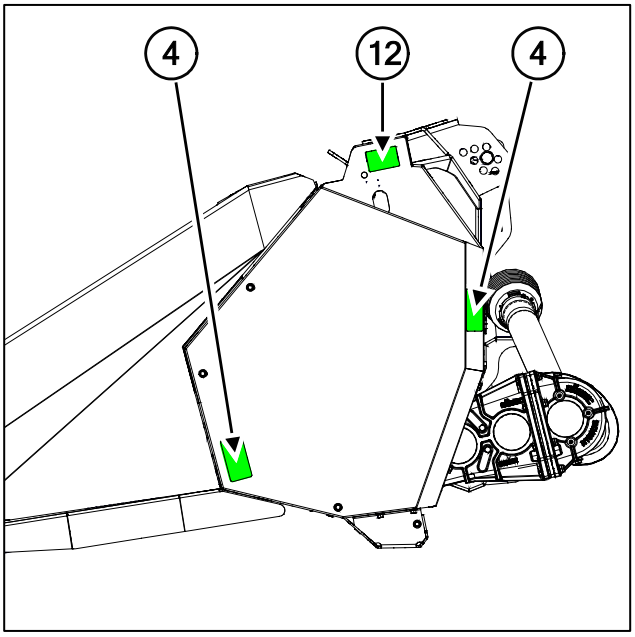

Rigid Head – Left Side View

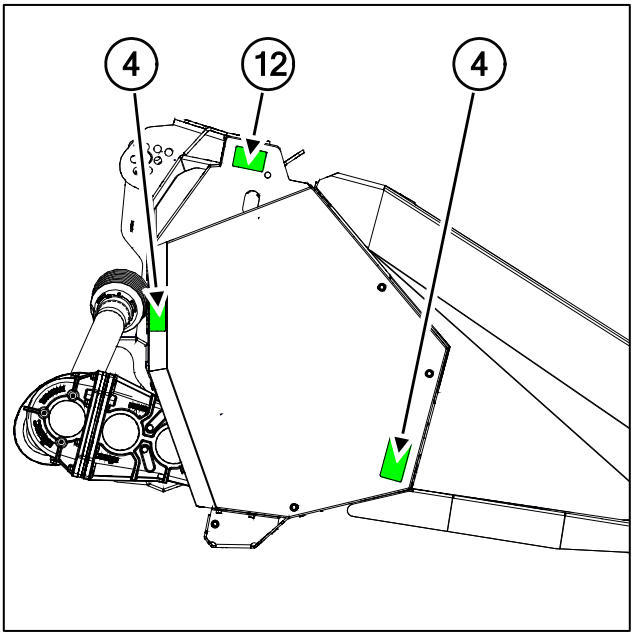

Rigid Head – Right Side View

2.5.2 – Folding Corn Head Decal Locations

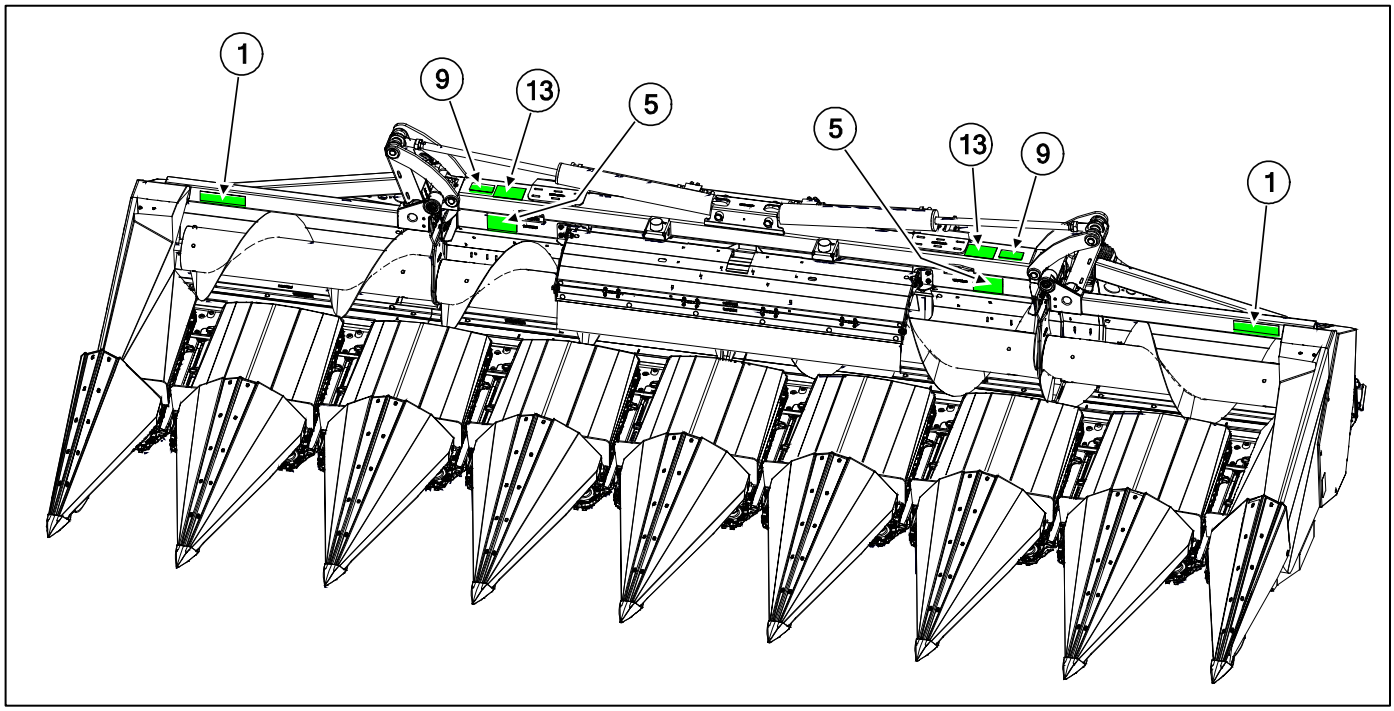

Folding Head – Front View

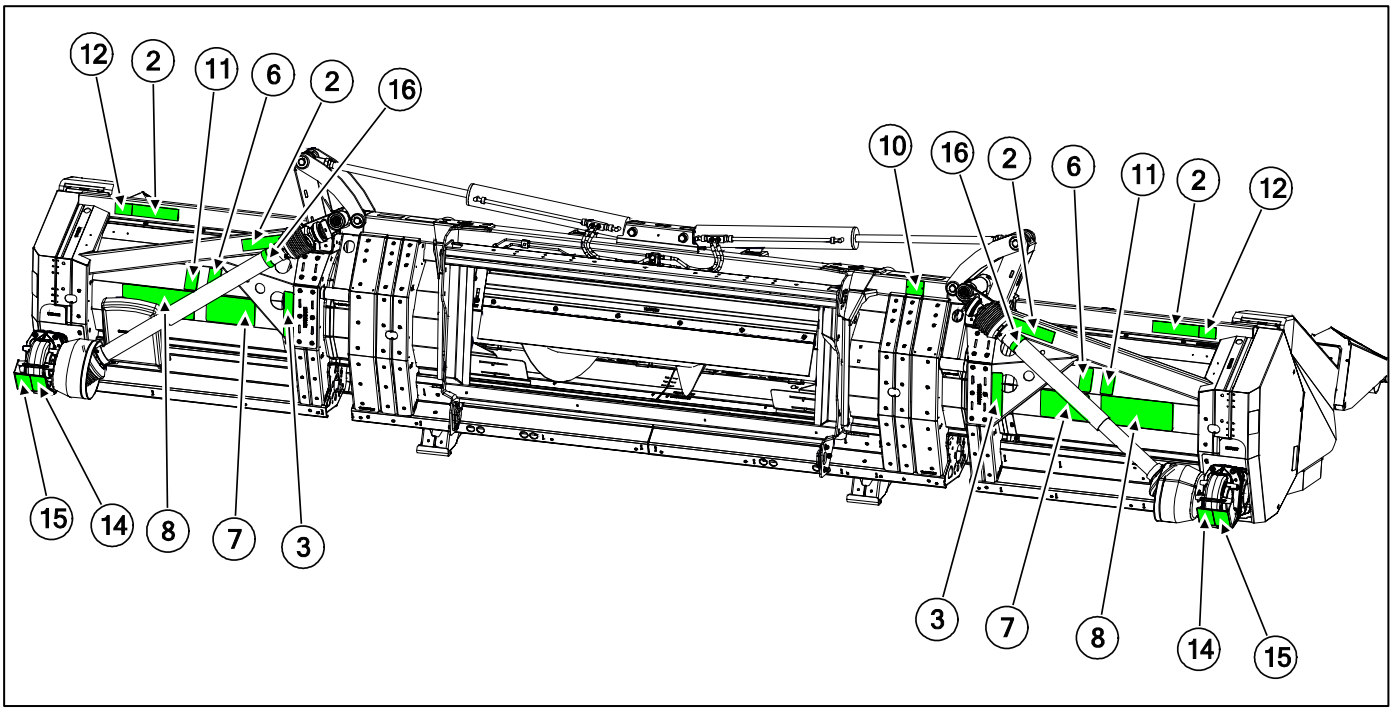

Folding Head – Rear View

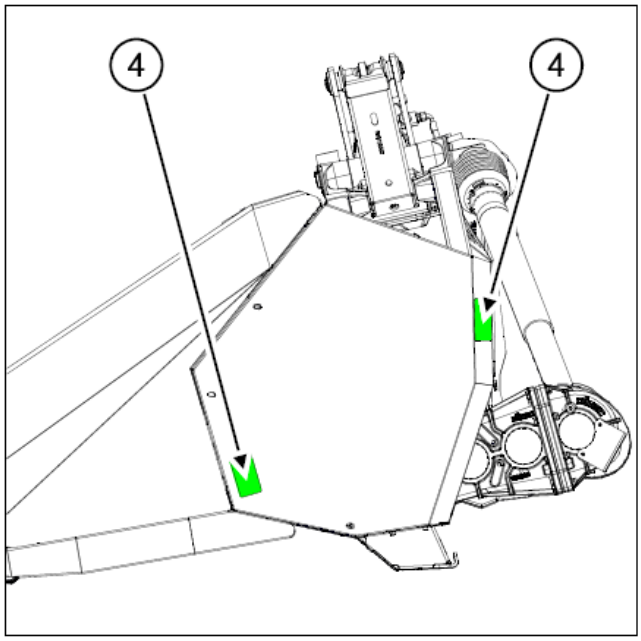

Folding Head – Left Side View

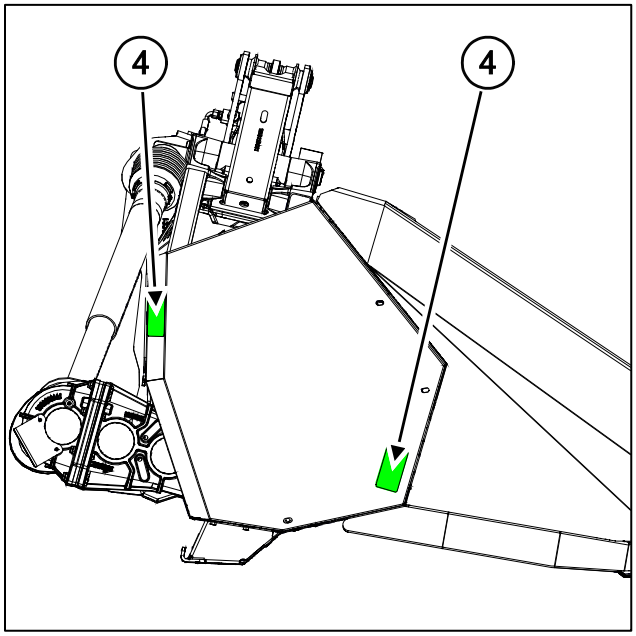

Folding Head – Right Side View

2.5.3 – Decal Descriptions

1) **Decal not provided for the EU market**

2) **Decal not provided for the EU market**

3) **Decal not provided for the EU market**

4) **SD-0004**

DANGER

Projection of foreign bodies.

Do not come near the machine in motion.

Failure to comply will result in death or serious injury.

5) **SD-0005**

WARNING

Stop corn head drive and shut off engine before unclogging rolls.

Rolls and gathering chains move faster than you can release stalks.

Failure to comply may result in serious injury or death.

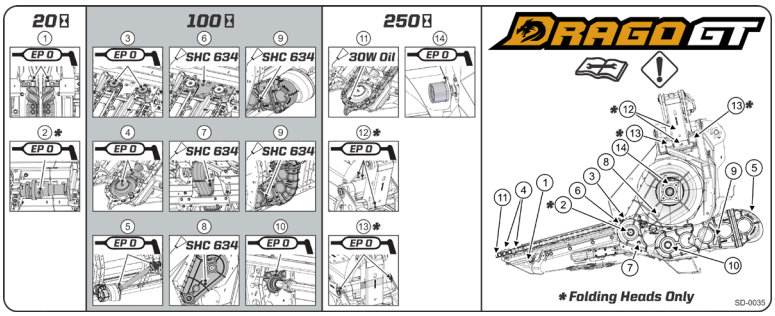

6) SD-0006

DANGER

Rest header on the ground or set header lift cylinder safety lock before going under unit.

Failure to comply will result in death or serious injury.

7) SD-0034

Corn head angle instructions

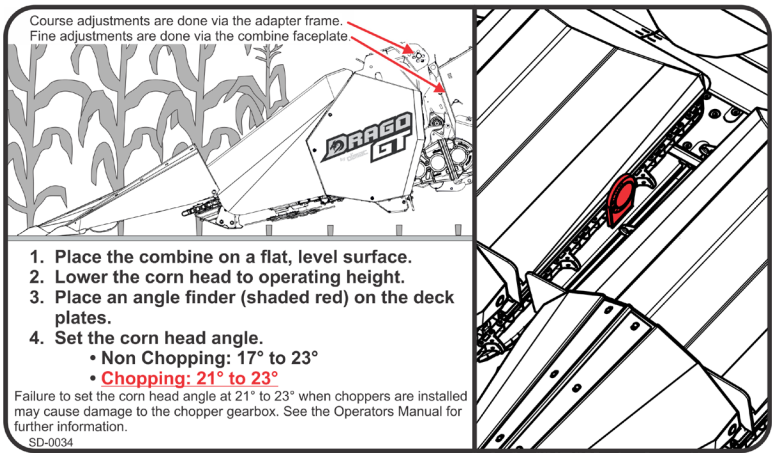

8) SD-0035

Lubrication Decal

9) SD-0010

WARNING

SLIPPERY SURFACE

Do not use this area as a step or platform.

Failure to comply could result in a serious injury or death.

10) Serial Number Plate

Contact *OLIMAC SRL* if this becomes damaged or missing.

11) SD-0014

DANGER

Do not come near the machine during the folding process.

Failure to comply will result in death or serious injury.

12) SD-0015

European Conformity

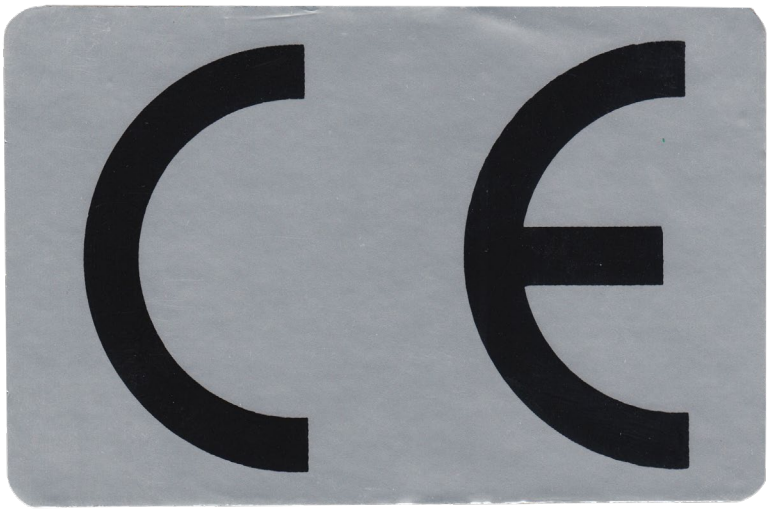

13) SD-0021

CAUTION

PTO must be removed from combine and placed in storage position before folding head.

This decal is used only on 8 row 30" folding corn heads.

14) Decal not provided for the EU market

15) Decal not provided for the EU market

16) SD-0029

TOP ROTATION

For use on 30 degree rotation PTO shafts.

2.6 – Intended Use

The equipment is designed and intended for corn/sunflower harvesting once attached to a combine.
The mechanical and hydraulic transmission and electric power are provided by the combine.
When using the equipment, the cab of the combine will be the main workstation for operators.

2.6.1 - Equipment operating ranges:

Environmental (Tmax and min, etc..) machine designed to operate outdoors.

Minimum Operating Temperature = 0 ° C

Maximum Operating Temperature = 45° C

Maximum moisture = 85%

Maximum Storage Temperature = 70 ° C

Minimum Storage Temperature = -20° C

Expected work cycles: machine designed for corn/sunflower harvesting.

User: an adult person capable of performing activities related to the use of the equipment by operating it from the combine cab, of carrying out the its attachment/detachment to the combine and all other basic operations related to the use of the equipment.

This operator must have read and understood this manual, must be trained in the safe use of the equipment for the operations for which it is designated.

Expert user: person that has the user's qualifications and who, in addition, is able to perform all tasks of lubrication, adjustment, transport and handling on/of the equipment.

This operator must have read and understood this manual, must be properly trained and have the necessary experience for the safe use of the equipment for all operations for which it is designed.

Serviceman: person that has the qualifications of expert user and who, in addition, is able to perform all maintenance and replacement of parts.

This operator must have read and understood this manual, must be properly trained and have the necessary experience for the safe use of the equipment for all operations for which it is designed.

Power supply: power supply of the equipment through

- Connection of PTO drive shafts to the drive of the vehicles on which it is intended to be installed by the user.
- Connecting electrical outlet for powering lights and electrical accessories, if any.

2.6.2 - Equipment operation

Using the corn head requires connection to the drive through a PTO shaft. The operator operates from the cab of the combine to which it is attached and which can (and should) run all commands required for the equipment. Other users are not expected or required in different locations other than the cockpit described above.

The equipment operation is to "take" the plant and drag it down using a pair of stalk rollers installed on each row.

The ear is separated from the plant and dragged toward the bottom of the machine where the cross auger performs the collection of the product.

INTERACTIONS WITH THE MACHINE OPERATORS:

From his workstation on the combine, the operator is able to do the following:

- Folding lateral rows (according to available models),
- Setting speed (according to available combine models),
- Start-up and shut-down of mechanical transmission,
- Lifting/lowering of the corn head,
- Side augers rotation speed adjustment (if any),
- Switching lights on (if any).

Other operations performed by the operator are:

- Loading/unloading equipment
- Lubrication,
- Adjustment,
- Maintenance,
- Cleaning.

2.7 – Contraindications for use

The machine must not be used:

- For operations other than those set out in Chapter 4.
- In potentially explosive environment.
- By personnel not properly informed and trained to use it.
- If shields and safety devices in not in place, removed or tampered with.
- With electrical bridges and/or other means which exclude power/parts of the equipment.
- For applications other than those indicated in this manual.
- Under working conditions other than those provided for and authorized by the manufacturer.
- By connecting to cord head power devices other than those provided for and authorized by the manufacturer.
- **In terms and conditions other than as stated in this manual.**

It is forbidden to:

- Walk over the equipment.
- Making any adjustments, lubrication or maintenance work without having first secured the machine as described in this manual.
- Inadequate clothing wearing loose or dangling garments.
- **Operate the machine in the presence of people in the vicinity thereof.**

Failure to follow the instructions for use provided in this manual could result in serious damage to property or persons.

2.8 – Shipping Position

2.8.1 – Shipping Stand

Danger: During the operations described below, wear the appropriate PPE: helmet, gloves and safety shoes.

The OLIMAC corn head is equipped with fixed supports applied on the underside of the frame. For space-related reasons, the corn head can be equipped with a stand (A) allowing the storage of the equipment in an upright position and facilitating easy access to adjustments and lubrications to be performed on the head.
Be very careful when unloading or lifting the corn head from its stand.
All combine transmission parts/PTO shafts must already be installed or supported on the central auger of the corn head.

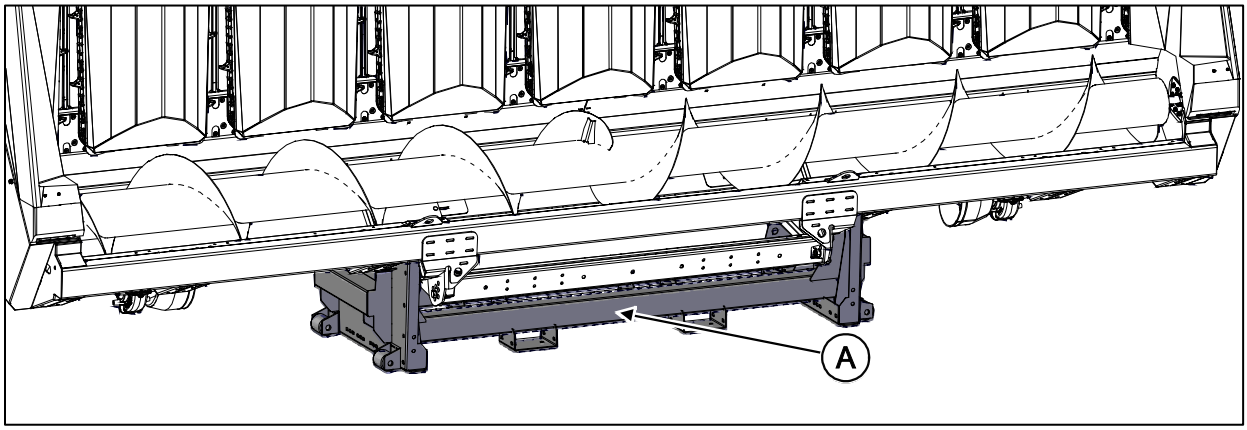

2.8.2 – Using a Stand

Position the corn head on the stand by lifting it with the proper cables/chains as described below.
The stand must be stuck between the two supports on the center of the equipment as shown in the image below.

Once the machine is resting steadily and there is no danger of falling/flipping, tighten the 4 fixing bolts.

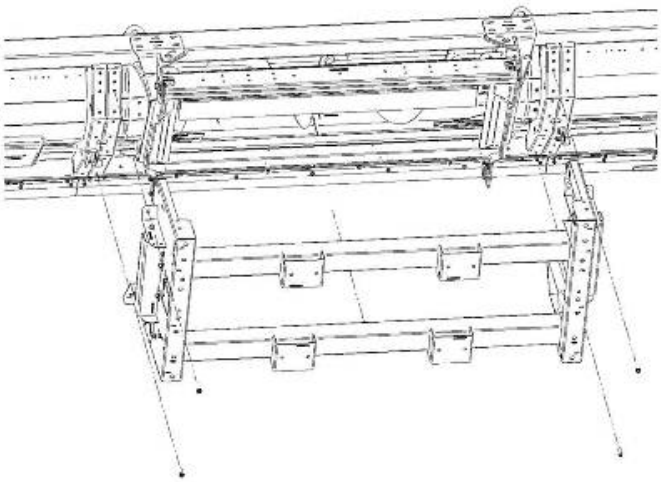

Before performing the lifting operation, make sure the stand is securely attached by the 4 bolts provided.

Danger: failure to mounting the stand with bolts may cause the fall of the corn head during lifting and transporting.

Before using the stand check for damage, shock, deformations that could compromise safety.

2.8.3 – Lifting/Lowering the Corn Head

Danger: Use only a suitable lifting unit for lowering or raising the corn head. Failure to do so may result in serious injury or death.

All the operations done with the aid of equipment like mechanical power-lift, cranes, forklifts or slings must be carried out by personnel that are properly trained in this type of operation. See table 9.1 for weight specifications.

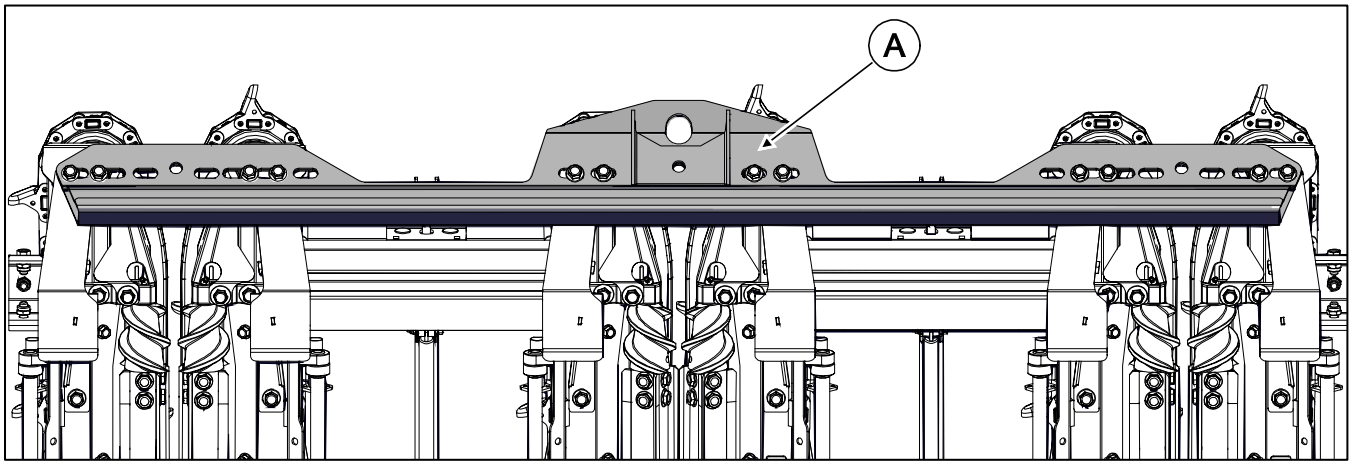

To lift the corn head with a fork lift:
Insert the forks into the appropriate slots on the stand mentioned in the previous chapter.
If the corn head has no shipping stand, it is strictly forbidden to raise the head with a forklift tucking the forks simply under the equipment; danger of tipping.
Before lifting, check that the stand is correctly fastened by means of 4 tightened bolts.

Danger: failure to mounting the stand with bolts may cause the fall of the corn head during lifting and transporting.

To lift the corn head with cables/chains:
Hook chains or straps suitable for lifting **(A)**
as indicated. Do not attempt to lift the corn head using other hooking points.
The small lifting bracket **(B)** that attaches to a single row
must not be used to lift the corn head. Failure to use the large lifting bracket **(A)** will bend the row unit frame.

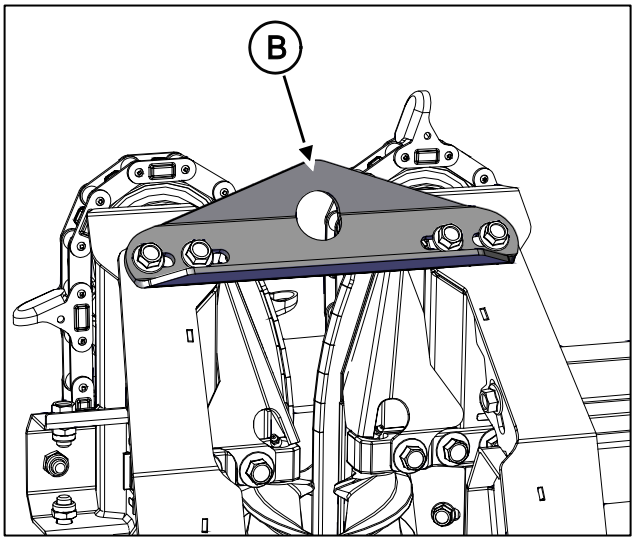

Important: failure to use suitable lifting brackets
may result in the bending of the row unit frame.

During the implementation out of the handling activities:

- Make sure that any lifting operation is performed by people qualified and trained in the use of lifting equipment;
- Make sure that no person stands or walks by under suspended loads or in the vicinity thereof;
- Make sure that the personnel responsible for handling use suitable PPE (**helmet, shoes and gloves);**
- Make sure that the anchorage is carried out using the pins installed for this purpose.
- Use ropes and/or harnesses suitable for the weight to be lifted and check their efficiency before use.

DANGER OF CRUSHING AND FALLING OF SUSPENDED LOADS:

Taken all precautions required by the applicable regulations and the instructions provided in this manual.

Section 3 – Attaching/Detaching Corn Head

Danger: when attaching or detaching the corn head to/from certain types of combine harvesters, you must stand under the corn head. If necessary, carefully lift the whole feeder house of the combine and lower the feeder house safety stop supports before going under the corn head. Otherwise you risk serious injury or death.

Important: before attaching the corn head to the combine, check the efficiency and the capacity of all the main moving parts and the lifting equipment, especially the capacity of tires, the brake system, the hydraulic lifting system of the feeder house and the mass balance for efficient steering system in the rear axle (20% of the total mass must rest on the rear axle).

To ensure stability during harvesting, use corn heads of the size and weight appropriate to combine being used. Refer to the instruction manual of the combine for details.

DANGER:

All installations and power connections must be strictly carried out when operation on the machine is safe and after the following safety measures are performed:

- **Always turn off the engine**
- **Set the parking brake**
- **Remove the ignition key and set the channel lock on the lifting cylinder**
- **Hang a "DO NOT USE" sign in the operator's cab on the combine**.

Failure to engage the safety lock may result in injuries or death.

Secure the lower pins between the corn-head and the adapter so that the machine is fully locked into the adapter. Failure to comply with this instruction can result in the detachment of the corn-head and the fall thereof.

Use suitable PPE for each of the operations.

3.1 – Attaching

Danger: During the attaching process, NO PERSON should be between the combine and the corn head.

Danger: A poor connection between the adapter and combine can cause the corn head to fall rapidly. Failure to follow instructions could result in serious injury or death.

Find a suitable flat hard surface away from other equipment.

1) Clean areas of contact between the feeder house and corn head of crop and other debris to ensure a proper fit.
2) Inspect the adapter plate on the corn head making sure the adapter is mounted correctly on the corn head and no hardware is missing or damaged.
3) Lower the feeder house so that the feeder house adapter clears the top beam of the corn head adapter.
4) Position the combine so the feeder house is centered in the corn head opening.
5) Drive the combine forward until the feeder house adapter is in front of the corn head opening.
6) Slowly raise the feeder house until the corn head is completely off the ground. If the corn head beam is not sitting down flat on the feeder house mount, lower the feeder house until the corn head touches the ground and raise it again. This should correct any misalignment.
7) Raise the feeder house until the safety stand **(A)** can be lowered onto the feeder house lift cylinder **(B)**.
8) Once the feeder house safety stand is in place, use the combine attachment mechanism to secure the corn head to the combine.
9) Make all electrical and hydraulic connections.
10) Install PTO shafts **(C)** onto the feeder house output shaft **(D)**.
11) Engage the feeder house at low engine idle to verify the corn head is running as required.

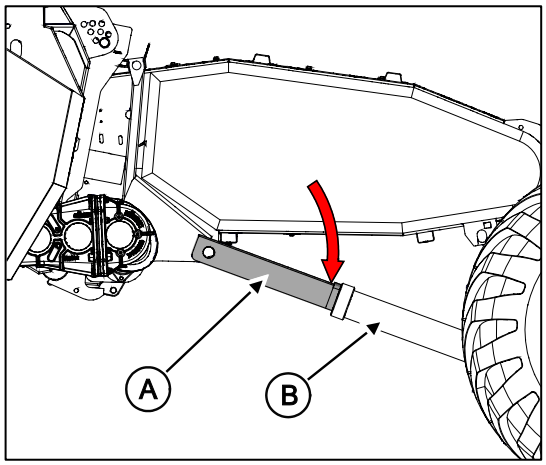

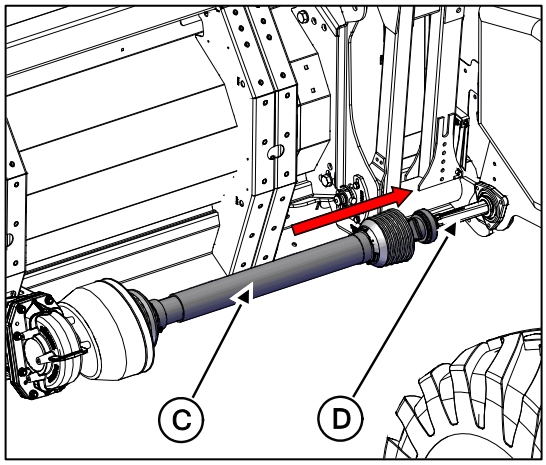

Always check that the PTO shaft shield are installed, undamaged and that the doors of the shaft cones are properly closed.

Before lifting the corn-head completely, make sure that the adapter is properly mounted.

Important: verify the correct angle of the corn-head to the ground. Failure to comply with this instruction can result in an increased power consumption of the corn-head or the breaking of a stalk chopper. When the front plates of the assembly touch the ground, the rear support should be raised by 70/90 mm.

3.2 – Detaching

Danger: during the detachment process, NO ONE is allowed to stand between the combine and the corn head.

Always stop the engine, engage the parking brake, remove the ignition key and engage the feeder safety lock in the lift cylinder, before working under the corn-head or the feeder house. Failure to latch the security locks can result in physical injury or death.

1) Find a suitable flat hard surface away from other equipment.
2) Raise the feeder house completely and engage the safety stand **(A)** on feeder house lift cylinder **(B)**.
3) Disconnect and place the PTO shafts **(C)** from the feeder house input shaft **(D)**.
4) Place the PTO shafts on the storage supports.
5) Disconnect and store all electrical and hydraulic couplings.
6) Disconnect the combine attachment mechanism to release the corn head from the combine.
7) Disengage the safety stand **(A)** on feeder house lift cylinder **(B)**.
8) Lower the feeder house until the corn head touches the ground and the feeder house adapter clears the top beam of the corn head.
9) Back the combine away from the corn head until clear and raise feeder house.

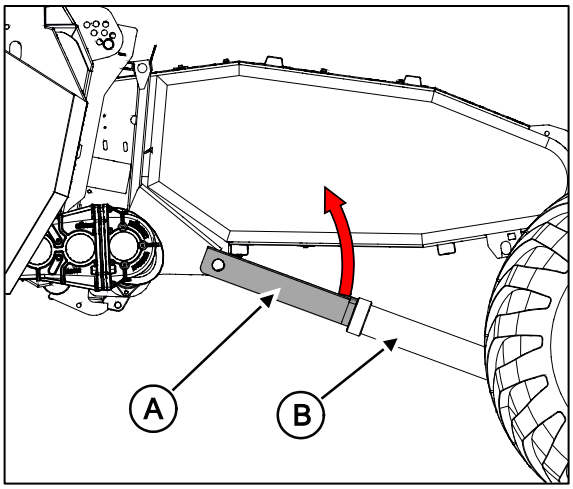

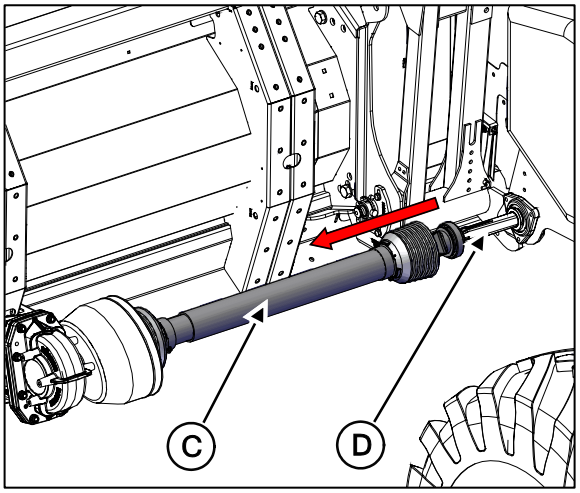

Important: If loading the corn head onto a transport trailer, ensure that the support pads on the trailer are in the correct locations. See section 4.2 for more details.

3.3 – Additional Corn Head Connections

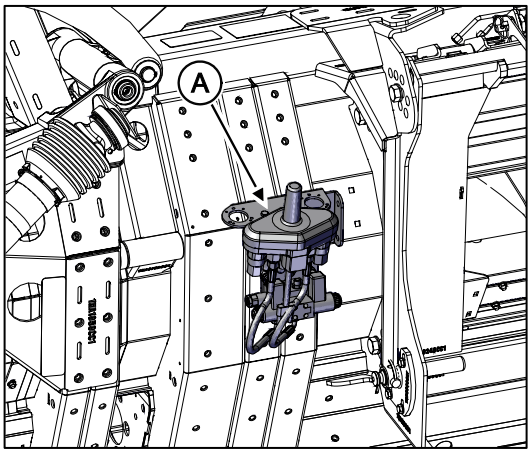

Auxiliary Hydraulics

Some Drago GT corn heads require additional combine hydraulics **(A)** to operate optional functions. These functions include folding heads, long down corn augers and short down corn augers.

3.4 – PTO Shaft Phasing

Important: For all GT corn heads, 30 degree free rotation drive shafts are standard equipment. It is important that they are mounted on the correct side of the corn head to prevent damage to the shaft. Each driveshaft has a decal indicating the direction of rotation.

1) Determine which direction the feeder house jackshaft **(A)** is turning. Typically direction of rotation is with the top of the shaft going forward.
2) Disconnect the PTO shaft from the combine.
3) Rotate the PTO shaft in the direction of rotation determined in Step 1 until the PTO shaft stops. This is the position that the PTO shaft will be in during operation.
4) Inspect both ends of the PTO shaft to see if the u-joint caps are in line (in phase).
   a. If the PTO shaft is installed correctly the u-joint caps will be in line (in phase **(B)**).
   b. If the PTO shaft is installed incorrectly the joints will be 30 degree out of line (out of phase **(C)**).
5) If a PTO shaft is found to be out of phase install the PTO shaft on the opposite side of the corn head and repeat Steps 1-4.

Important: If the shafts are run out of phase it will cause permanent damage to the PTO shaft.

Note: *The guards on the PTO shafts were removed from the two images for clarity.*

DANGER, MOVING PARTS: the supply of the mechanical transmission should not be activated in the absence of suitable protections.

Periodically check the integrity and conformity of PTO drive shafts and their guards, safety shields must have their doors are properly closed.

It is strictly forbidden to make any modification or tampering with the guards of the PTO shafts.

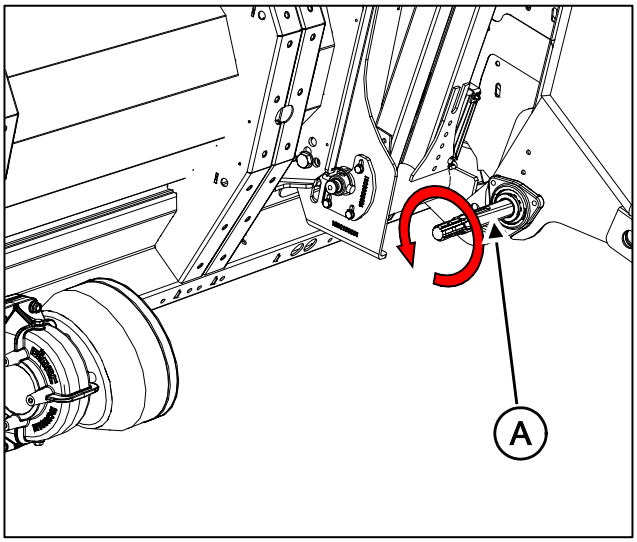

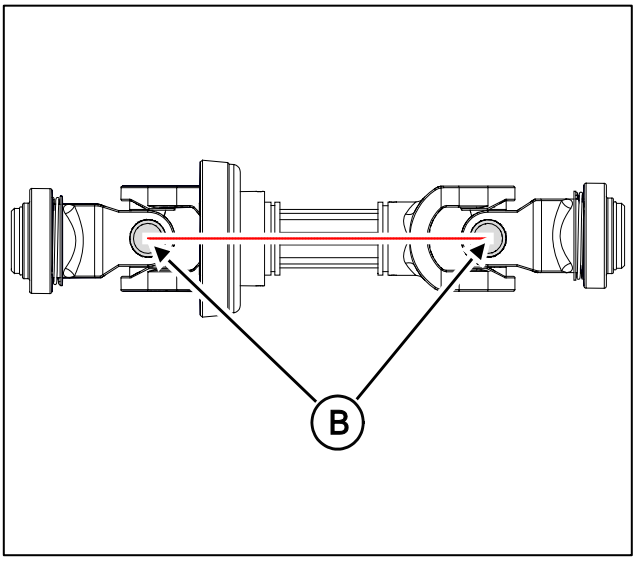

In Phase

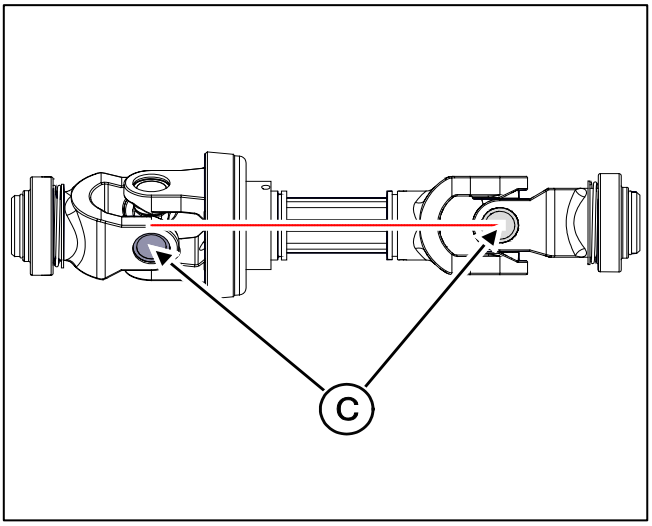

Out of Phase

Section 4 – Transporting

4.1 – Trucking

During transport by truck the corn head must rest on supports or on a stand suitable to keep it in the vertical position.
The operators must secure the stability of the equipment during all phases. For this purpose, it is mandatory to ensure the machine with a rope passing through the coupling rings.
It is recommended to use a trailer to truck the corn head with width greater than 6 m.

Only use trailers with adequate load capacity, with block configuration suitable for corn heads, with sufficient lighting and anchorage locations to ensure the corn head. See section 9.1 for corn head weights and specifications.

1. Configure the main blocks and the crossbeam on the trailer for correct head positioning. The corn head frame should be supported by the main crossbeam.
2. Disconnect all electrical and hydraulic connections.
3. Disconnect and store the drive shafts.
4. Disconnect the attachment mechanisms.
5. Place the corn head on the trailer so that it does not overload any axle.
6. Lower the feeder house until it disengages from the corn head.
7. Remove the combine from the corn head.

4.2 – Transport with Combine Harvester

It is important to follow the instructions on the combine manual for proper tire inflation pressure, specifications and configuration.

Important: follow local regulations regarding widths, lighting and decals. The use of an observer or pilot vehicle is recommended on busy, narrow or hilly roads, and while crossing bridges.

Some local laws prohibit the transport and road circulation of combines with their corn heads hooked.

Before going on the road, please contact your local law enforcement to know whether such transport is permitted and under what conditions.

It is recommended to use a trailer to truck the corn head with width greater than 4 m.

If the corn head is hooked to the combine, unless otherwise provided by local regulations, during transport follows these rules:

1. Make sure that the safety signs installed on the vehicles, such a signs and lights, mounted on the head and on the combine harvester are efficient and that the reflecting materials are clean and visible. Replace or repair any damaged or worn parts.
2. Verify and comply with applicable provisions for road circulation. Unless otherwise provided by the law, to move a combine with a corn head hooked to it, it is recommended to be supported by a pilot vehicle to signal appropriately the "oversize load".
   All permissions for the road transport of the combine must be acquired if required by national legislation.
3. The driving speed must be appropriate to the traffic and/or potential hazards, always in compliance with the road traffic regulations.
4. Avoid any behavior that might create any obstacle or danger to other means of transport, and make sure no traffic jam is caused behind the truck.
5. No one must be allowed to park or stand in the surrounding area while the machine is moved or when the engine is started during the corn-head testing phase.
6. Keep children and unauthorized persons out of the range of the machines and devices.
7. Make sure the tank is empty. High speed while driving, with the combine tank full of grain, may cause the braking of the tires.
8. Close the tank and auger extensions (if equipped).
9. Close and secure the unloading system.
10. If you are running a folding corn head, fold the corn head.
11. Turn on your signal lights of the combine.
12. Activate the brakes of the combine.
13. Lift your corn head in a position that allows good visibility.
14. Drive at a speed that ensures security.

Danger: the corn head hooked to combine affects speed, steering and brake capacity – do not exceed the capacity of steering and brakes.

Section 5 – Operation

5.1 – General Information

In the field, the corn head is placed with its ends between the rows of plants, the ends will open and catch the rows into the harvesting system.
The stalk rollers grasp the stalk of the corn plant and pull it down by passing it between two head plates placed on top of the stalk rolls which are intended drag the plant in the lower part of the corn-head and retain corn ears on top of the plates.
When the ear reaches and rests on top of the deck plates, the gathering chains convey the ear with a rotating motion into the cross auger, that carries the product into the conveyor of the combine.

Danger: Always shut off the combine engine, set the parking brake, remove the key and engage the feeder house housing cylinder safety stops in position on the lift cylinders before working under the corn head or feeder house. Failure to engage the safety lock may result in serious injury or death.

Row Dividers

The row dividers (snouts **(A)** & bonnets **(B)**) are the first part of the corn head to contact the crop. They are responsible for separating the rows of crop, standing up down corn plants and directing material toward the row unit.

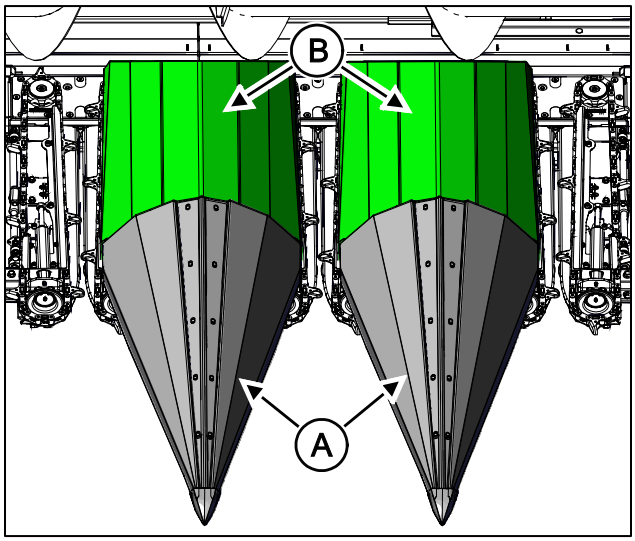

Gathering Chains

The gathering chains **(C)** assist in moving the stalk and the ear of corn rearward on the row unit toward the cross auger at the rear of the corn head.

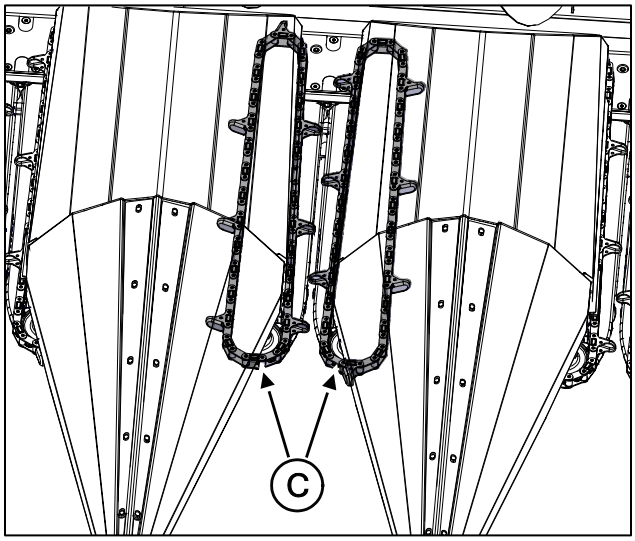

Deck Plates

The deck plates **(D)** on the Drago GT corn head are designed to gently strip the ears from the stalks when the corn plant is pulled down with the stalk roller. Both deck plates are independently adjusted with spring pressure and require no operator input.

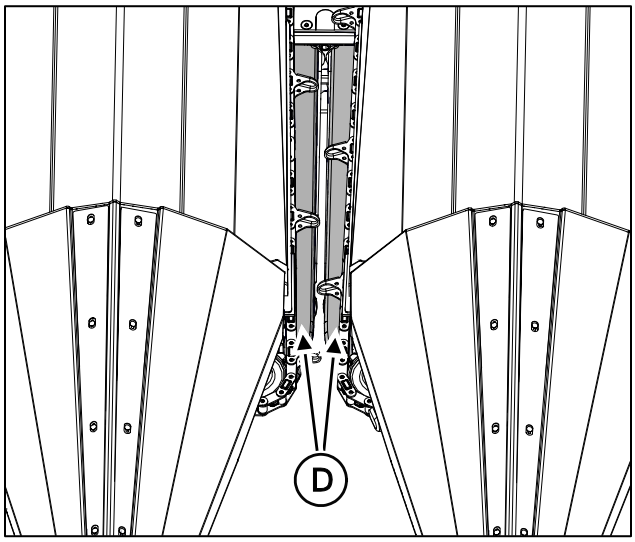

Stalk Rollers

The stalk rollers **(E)** counter rotate to one another creating a pinching action to pull the corn plant downwards. They also perform a small amount of sizing to the corn plant.

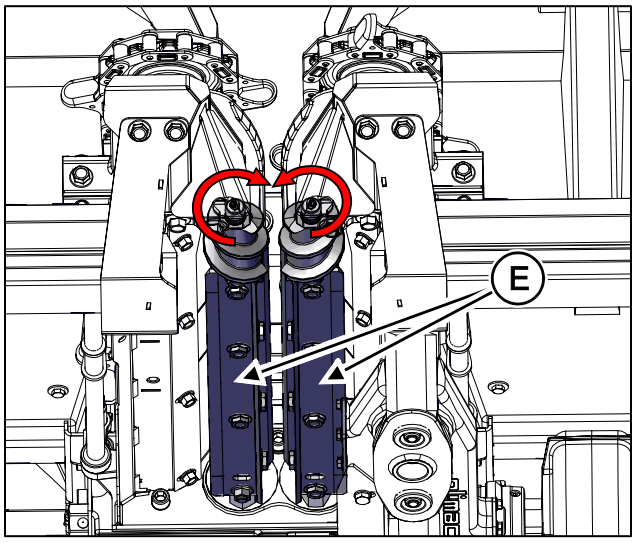

Stalk Chopper

The optional stalk chopper is responsible for additional sizing of residue as it exits the bottom of the corn head. The Drago GT corn head can be equipped with three different stalk chopping options to suit different farming practices. The non-chopping option will leave the longest stalks and the largest material sizing, while the Twin Chop+ offers the shortest stalks and smallest material sizing. Both the single chopping gearbox and the Twin Chop+ can be added at any time to a non-chopping head. Inversely both the single chopping gearbox and the Twin Chop+ can be removed at any time by adding the non-chopping block off plate.

Option 1 – Non Chopping (Standard)

The base Drago GT corn head is available as a non-chopping corn head. A block off plate **(F)** is installed in place of the chopping gearbox. This relies solely upon the stalk roller knives to break up residue, and will typically leave standing corn stalks approximately 12” (300mm) tall, depending on operating height.

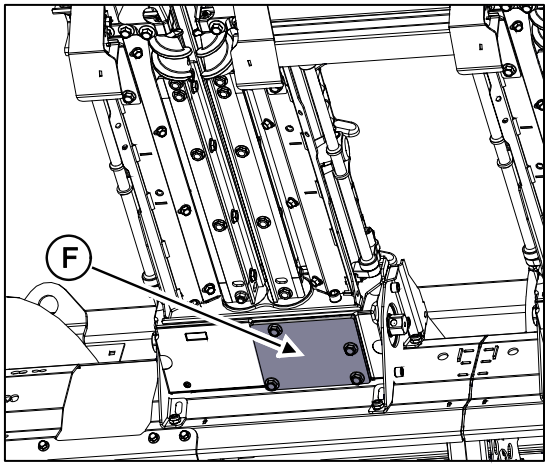

Option 2 – Single Chopper

The single chopping option incorporates a single gearbox **(G)** under each row of the corn head with a single rotating block with two knives. The corn stalks are first pulled through the stalk rollers, then the material is additionally chopped by the rotating chopping knives. The rotating chopping knives also cut the standing corn stalks left by the stalk rollers to the same height, depending on operating height. The single chopper is also equipped with a shut off feature (H) that allows individual rows to be disengaged.

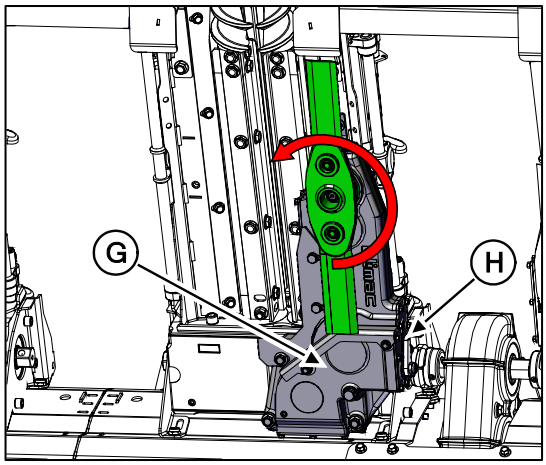

Option 3 – Twin Chop+

The Twin Chop+ chopping option incorporates a single gearbox **(I)** under each row of the corn head with two co-rotating blocks, each with two knives. The corn stalks are first pulled through the stalk rollers, then the material is additionally chopped by the co-rotating chopping knives. The forward mounted chopping block **(J)** rotates at a faster speed as compared to the rear chopping block **(K)**. This creates a counter cutting action on the corn stalk. This chopping option also cuts the standing corn stalks left by the stalk rollers to the same height, depending on operating height, but provides smaller material sizing. The Twin Chop+ is not equipped with a shut off feature.

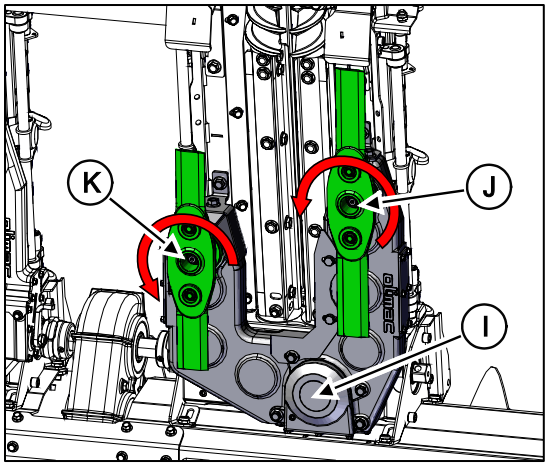

After the corn head has been set-up, and the pre-delivery checklist performed, the corn head is ready for field operation:

1) Be sure all safety shields are in place and secured properly.
2) Be sure the combine used is weighted properly at the rear for the size of corn head being used (see Combine Operators Manual)
3) Be sure that the tires on the combine are rated and inflated correctly (see Combine Operators Manual)

Important: When engaging the corn head, ensure the combine engine is at low idle to prevent damage to the corn head.

Danger: Do not approach the corn head when it is running. Maintain a minimum distance of 100 feet during operation. There may be flying debris. Failure to comply could result in serious injury or death.

5.2 – Individual Component Protection

The Drago GT corn head comes from the factory with Individual Component Protection on key items to prevent component damage if foreign objects are encountered. The Individual Component Protection consists of radial pin slip clutches installed inside gears rotating in sealed housings. These slip clutches require no maintenance since they operate in an oil bath environment. These slip clutches are set at the proper torque level at the factory and cannot be adjusted.

Gathering Chains

Both gathering chains on each row of the Drago GT corn head have their own independent radial pin slip clutch **(B)** inside the input gears **(A)**. This allows each gathering chain to slip independently of each other in the event that a foreign object is encountered.

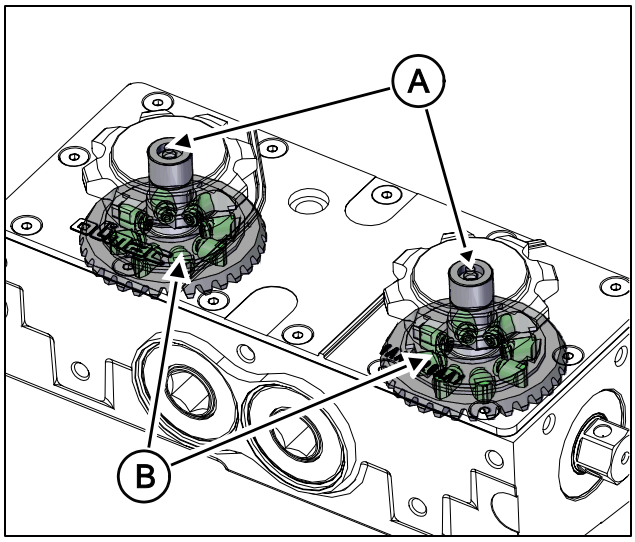

Row Unit Gearbox

The main ring gear **(C)** that drives the stalk rollers in each row unit gearbox on the Drago GT corn head has an internal radial pin slip clutch **(D)**. This allows both of the stalk rollers to slip independent of the rest of the row unit should a foreign object be encountered. In the event the stalk rollers slip they will remain timed.

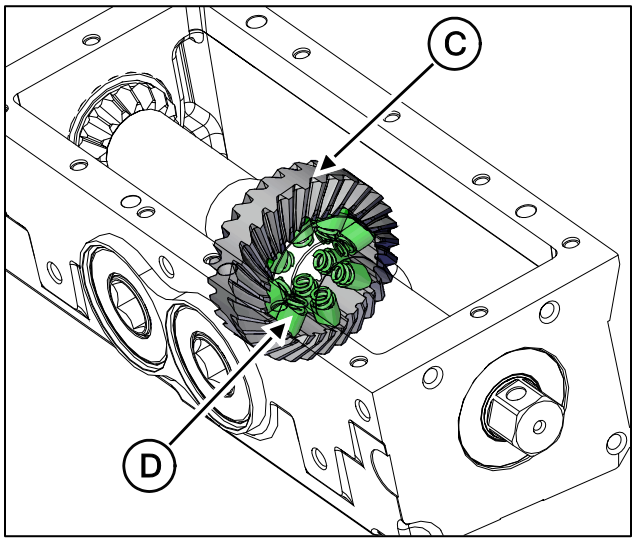

Stalk Chopper

The Single Chop and Twin Chop+ stalk chopping gearboxes are protected by a radial pin slip clutch **(F)** located at the input gear **(E)** into the gearbox.

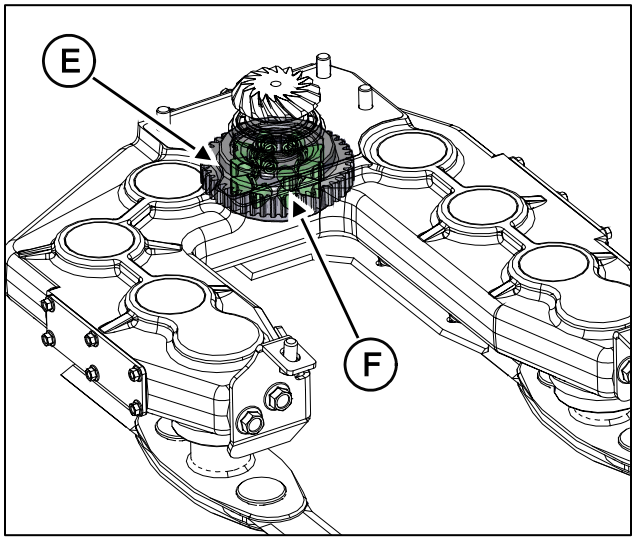

Jack Shaft Shear Bolt

The shear bolt **(H)** is additional protection in the event of operator error such as ingestion of foreign objects or incorrect head angle. Its function is to stop any power spikes to the combine to prevent damage to the combine (drive shafts, belts, etc.). The shear bolt is located on the hub **(G)** on the jackshaft between the heavy duty gearbox and the intermediate gearbox. The bolt is an M12 x 60 x 1.75 grade 8.8.

Note: *Do not install a larger or higher grade bolt in place the shear bolt. Doing so may cause additional component failure.*

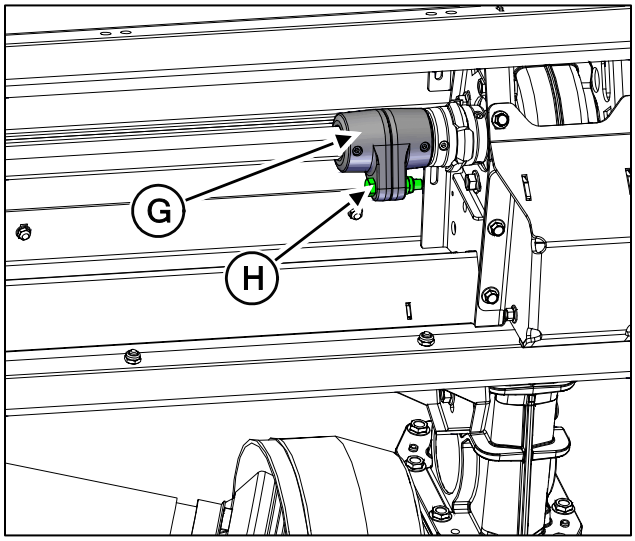

5.3 – Power Transfer

The flow of power through the Drago GT corn head is much more compact than previous models. The power enters the corn head through the PTO shaft **(A)**.

A) PTO Shaft
B) Heavy Duty Gearbox
C) Jackshaft (includes shear bolt)
D) Intermediate Gearbox
E) Tow Shaft
F) Auger Gearbox

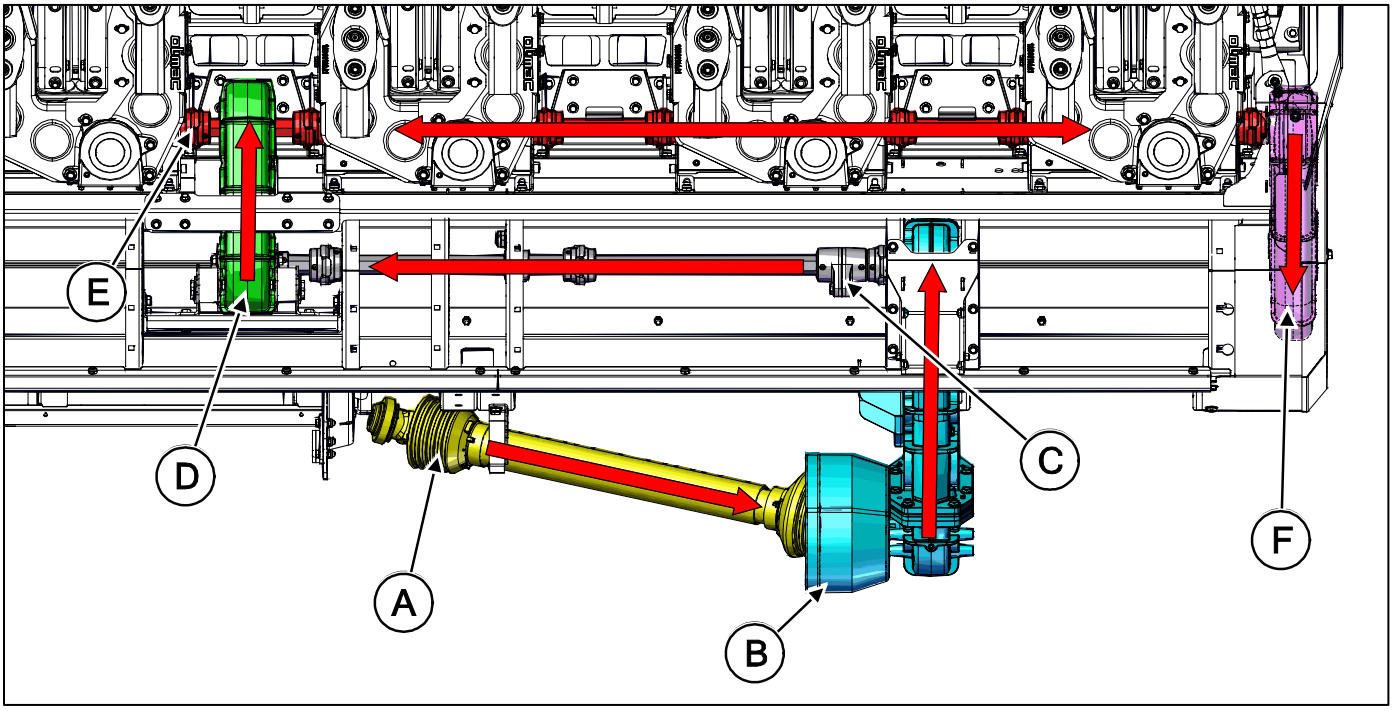

5.4 – Deck Plates

The deck plates on the Drago GT corn head are designed to gently strip the ear of corn from the stalk while minimizing loss from but shelling. This is accomplished by allowing both deck plates on each row to adjust independently to crop conditions. Additional dampening is accomplished by the use of the QuadSuspension that allows the deck plates to move up and down slightly.

5.4.1 – Deck Plate Pressure

The deck plates **(A)** on both sides of the row unit are automatically and simultaneously adjusted via self-contained pressure springs **(B)** to match the diameter of the corn stalk. This allows for two advantages.

1) The corn stalk remains centered in relationship to the stalk rollers to minimize stalk whip which causes ears to be thrown out of the corn head.
2) The deck plates remain tight to each individual corn stalk minimizing any gap that may allow the ears of corn to come into contact with the stalk rollers which helps to minimize corn shelling in the corn head.

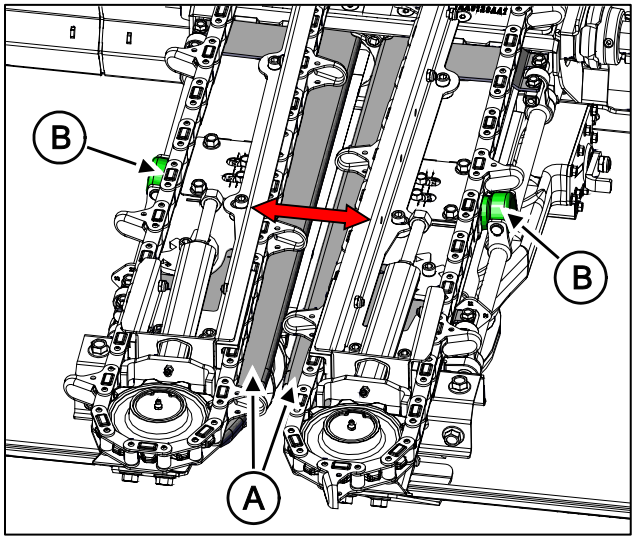

The deck plate pressure is controlled by a piston **(C)** with an internal spring **(D)** mounted in tension. The deck plate pressure piston is sealed and does not require any lubrication or maintenance. For adjustment of the deck plate tension see Section 6.6.

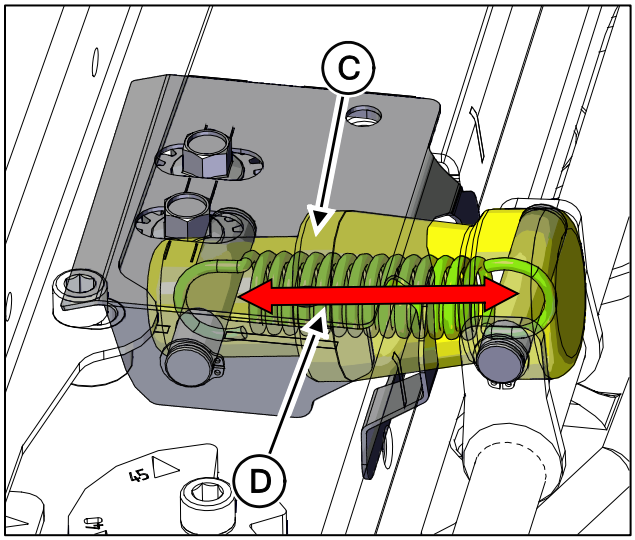

5.4.2 – QuadSuspension

The deck plates on the GT series corn heads also feature a spring loaded deck plate cushioning feature called QuadSuspension. There are two deck plate shocks **(F)** are positioned under each deck plate **(E)** which absorb some of the energy of the ears of corn as they contact the deck plates. This helps to reduce butt shelling in dry conditions.

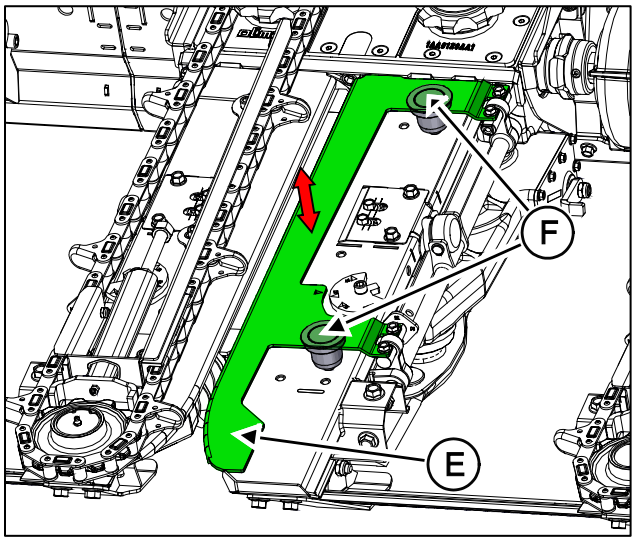

Operation of the deck plate shock is done by a spring **(I)** inside a sealed cylinder **(G)**. This rides inside an alignment bushing **(H)** that is pressed into the row unit frame. This system requires no adjustments.

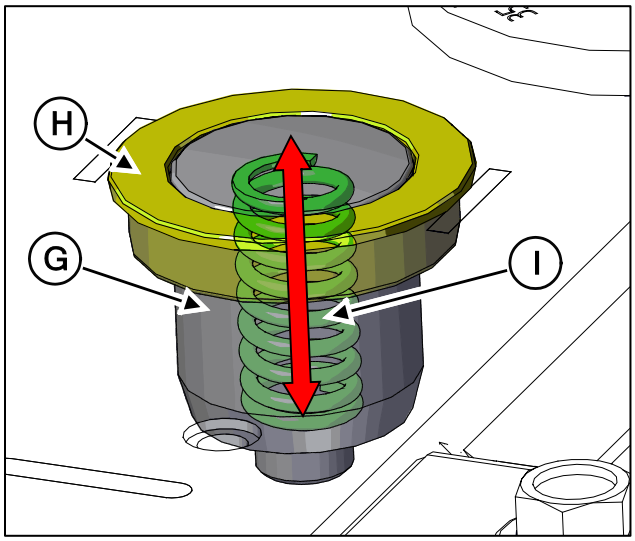

The Quad Suspension pistons can be accessed by removing the four bolts **(J)**, removing the gathering chain and guide **(K)** and rotating the deck plate up **(L)**.

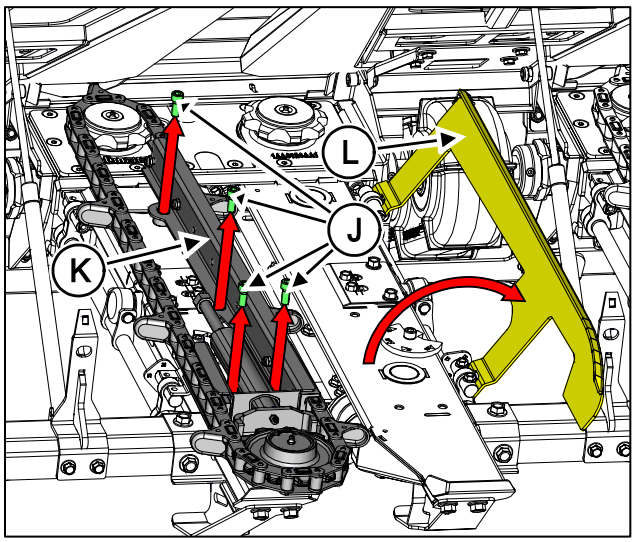

5.5 – Folding Frame

Some Drago GT corn heads are available in a folding configuration. Some combine models, particularly those with a short feeder house, may allow the corn head to contact the cab windshield when the feeder house is fully raised. These models include, but are not limited to, the following series of combines; Case IH 1400-2500, Case IH 5088-7140, Gleaner R & S, & New Holland TR. Caution should be exercised when raising the feeder house on these combines with the corn head in the folded position.

Important: Ensure that the folding corn head is compatible with the model of combine being used before attempting to fold or unfold.

Important: When transporting a folded corn head on a combine, keep the feeder house low enough to avoid obstructing the operator's view of the road.

Warning: Failure to follow the procedures below may result in permanent damage to the corn head frame or hydraulic system may occur.

5.5.1 – Folding Procedure

1) Ensure that the feeder and threshing drives on the combine are disengaged.
2) Engage the parking brake.
3) Lower the corn head until it is approximately six inches above the ground.
4) Shut off the combine engine and remove the key.
5) Remove all crop material and debris from the top of the corn head frame and feeder house.
6) If using an 8 row 30" folding corn head, disconnect and store the PTO shafts.
7) Start the combine engine and engage the wing fold hydraulic function.
8) Allow the wings to completely fold until both wings are contacting the rubber pads in the center of the corn head.
9) Raise the feeder house to an acceptable height as to not obstruct the operators view and to avoid contact with other objects.

Danger of crushing: the operation of folding and unfolding of the outer folding row unit wings must be done without any people around the corn head.

5.5.2 – Unfolding Procedure

1) Ensure that the feeder and threshing drives on the combine are disengaged.
2) Engage the parking brake.
3) Lower the corn head until it is approximately six inches above the ground.
4) Engage the wing unfold hydraulic function. Ensure that the wings are fully unfolded and the locking cylinders are fully engaged (if equipped).
5) If using an 8 row 30" folding corn head, shut off the combine engine and remove the key then reconnect the PTO shafts.
6) Start the combine engine and raise the corn head to operating height.

Important: Never transport the corn head unless it is in the completely folded or unfolded position.

Important: Never fold or unfold the corn head while the combine is moving.

5.6 – Automatic Header Height Control

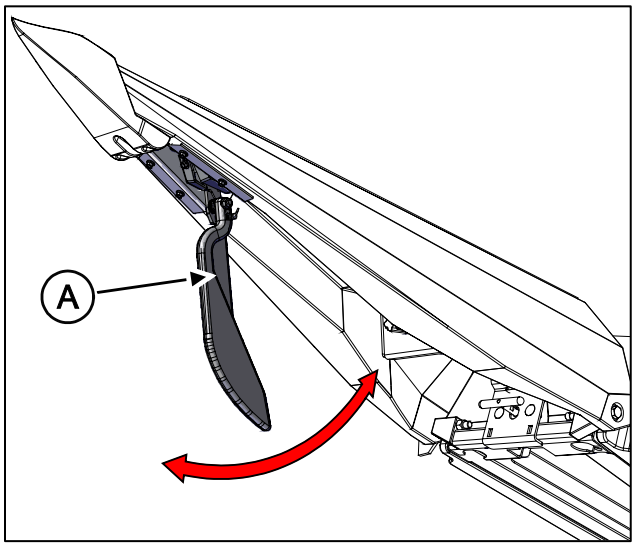

Automatic header height control is optional on all Drago GT corn heads. This option allows the height of the corn head to be automatically controlled. A total of one to five height sensors can be installed depending on the width of the corn head. The height sensor **(A)** is installed under the gathering point. For more information refer to the Headsight Operators Manual.

Important: For best performance, mount the height sensor as far forward in the slots in the mounting plates as possible.

Wire Routing:

The wire harnesses for the automatic header height control should be inspected periodically to ensure that they are installed in such a way to avoid crop material and other foreign objects. Most causes regarding the failure of this system can be traced back to poorly routed or secured wires. View the Headsight Installation Instructions available at www.headsight.com.

Calibration:

Prior to operation it is critical to perform a successful calibration. Failure to perform a successful calibration will cause poor performance and may cause snouts to become damaged. Visit Headsight at www.headsight.com to view the calibration procedure for the model of combine being used.

5.7 – Before starting in the Field

Always stop the engine, engage the parking brake, remove the ignition key and set the cylinder feeder safety lock in the lifting position, before working under the corn-head or the feeder house.

Failure to engage the feeder safety lock can cause injury or death.

Run the following checks before working on the field:

1) Make sure that all the parts coupling the combine harvester to the corn-head, the stalk rolls and their supports, pins are NOT worn, damaged or corroded;
2) Make sure that all safety protections are in place and that they are properly secured.
3) Clean the coupling parts;
4) Carry out operations of lubrication (see list of lubricants);
5) Perform the checks on the main machine (combine harvester) as required by the manufacturer;
6) Check the tightening of nuts and bolts and the efficiency of the protections.
7) Make sure that the total mass of the combine harvester and corn-head is properly distributed on the axles of the machine.
8) Make sure that the tires of the combine are properly inflated (see the combine manual).

After the corn-head is assembled and all the checks are performed, the corn-head is ready to be used in the field.

Please note: When you start the corn head, make sure that the engine of the combine runs at low speed to prevent damage to the corn head.

Danger: do not approach moving corn heads. Keep a minimum distance of 30 meters during operations, since flying debris may cause serious injury or death.

5.7.1 - Start working in the Field

Start the channel at a low rpm speed to verify that the corn head functions as required.

Operate the combine and proceed at low speed until you reach a familiarity with the corn head. After doing several trials, stop the corn head and shut off the combine engine.

After it is in a safe position, check all bearings to verify the absence of excessive heating. All bolts must be screwed and the harvester chains must be in tension.

Make all the necessary adjustments. See Section 6.

Danger: shut off the engine of the combine, set the brake, remove the key and lower the feeder house safety stop supports before approaching the corn head. Otherwise you risk serious injury or death.

Drive and operate with caution:

Drive carefully in order to maintain the corn head between the rows. Never exceed the loading capacity of the corn head or of the combine. Overloading can cause breakage. Start at a low speed and gradually increase until you find the right working speed.

Please tend your ear in order to detect unusual noises or shots on clutches. The correct working speed depends on the condition of the crop and the knowledge and experience of the operator.

Important: matching the speed of the corn head to ground speed is very important for good harvesting and to minimize the loss of grains. Ideally, in terms of standing plants, the chains should run slightly faster than the stalks come into the row line. For best results, the drive shaft of the corn head should operate between 630 and 700 RPM. Note that this RPM range is not the speed of the feeder house. For the correct ratios of transmissions and the recommended speed of the feeder house, contact your authorized GT Dragon dealer.

In the event of clogging of some moving gathering parts, the operator must perform the following steps:

- Reverse the direction of the main drive and move it a few meters ahead;
- Rotate the harvesting parts in order to unload the produce in excess;
- If manual work is required, the operator must place the machine on a flat surface, turn off the engine, engage the emergency stop, wear the gloves and operate on the stuck parts.

In the event of mechanical failure, the drive-shaft must be disconnected before performing any repair.

DANGER MOVING PARTS AND PROJECTIONS: Do not get close to the moving corn head and keep a safe distance (at least 30 meters) from the machine.

Pay attention to the projection of foreign bodies caused by the rotating parts.

Do not start the harvesting operations without making sure that no one is standing within the range of operation of the machine.

Failure to follow this precaution can result in injury or death.

Section 6 – Adjustments

The procedures described in this chapter can be performed only by qualified, trained and authorized personnel having appropriate expertise and experience.

Before starting any work operation, wear suitable PPE.

All interventions are to be performed only after securing the machine as described in this manual.

Danger: before servicing or adjusting any part of the corn head, activate the feeder safety stop supports, the brake, turn off the combine, remove the key and put a warning sign on the operator's platform. Otherwise you risk serious injury or death.

Corn head basic alignment

Due to their construction purposes and operation, the stalk rollers, the gathering chains, the augers conveyors, the stalk choppers cannot be fully protected.
For this reason, during operation safe distance MUST be kept from these moving parts.
All operations performed on the machine must be carried out with utmost caution, with adequate personal protection equipment to prevent accidents and carefully following the safety instructions described in this guide.

6.1 – Corn Head Angle

Danger: Before repairing or adjusting any part of the corn head, engage the feeder house lift cylinder safety stops, set the parking brake, turn off the combine engine and remove the key and hang a warning sign on the operator's platform. Failure to do so could result in serious injury or death.

Important: It is critical that the angle of the corn head is adjusted to run between 17° and 23° for non-chopping corn heads and 21° to 23° for corn heads equipped with stalk choppers. Failure to do so may cause damage to chopping gearboxes (if equipped).

6.1.1 – Corn Head Angle Adjustment

1) Ensure the tire pressures and ballast are correct for the corn head being used. See the Combine Operators Manual for specific information on configuration.
2) Move the combine to a flat, level surface.
3) Completely attach the corn head to the combine.
4) Lower the corn head until the head is at operating height.
5) Measure angle of the deck plates by placing an angle finder (ST-6), included in the black document box on the back of the corn head, directly on the deck plates.
- **a.** Non-chopping corn heads
  - **i.** Head angle should be between 17° and 23°.
  - **ii.** Recommended setting for normal harvest conditions is 20°.
  - **iii.** Recommended setting for down corn is 22-23°.
- **b.** Chopping corn heads
  - **i.** Head angle should be between 21° and 23°.
  - **ii.** Recommended setting for normal harvest conditions is 21°.
  - **iii.** Recommended setting for down corn is 22-23°.

6) If the corn head is not at the correct angle, disconnect the corn head and adjust the head angle by one of the two options below.
- **a.** Course Adjustment: Performed by loosening the bolts of the corn head adapter frame and moving it to one of the three locations.
- **b.** Fine Adjustment: Performed by adjusting the angle of the feeder house faceplate on the combine. See Combine Operators Manual for the correct adjusting procedure.

7) Reconnect the corn head and recheck the head angle.
8) If the corn head angle is not correct, repeat step 6.
9) If the head angle is correct, adjust the snout tips until they are touching the ground.

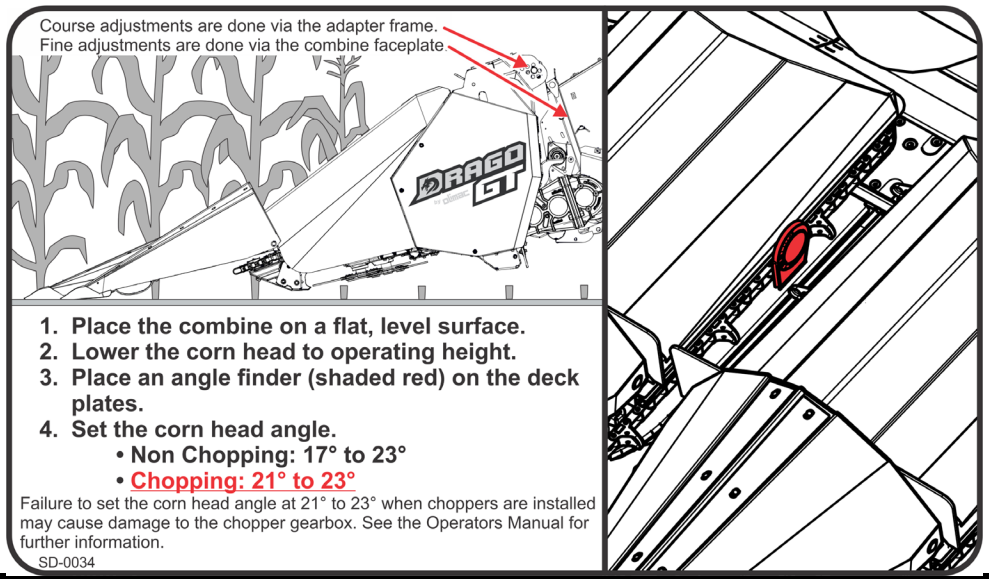

6.1.2 – Adapter Frame Adjustment

The adapter frame on the Drago GT corn head is adjustable to three different positions. The hole locations specified are the corresponding holes to use for the degree measurement listed. Due to different combine configurations, this adjustment should only be used as a course adjustment. Final corn head angle adjustment must be performed by adjusting the combine feeder house. See Combine Operators Manual.

John Deere

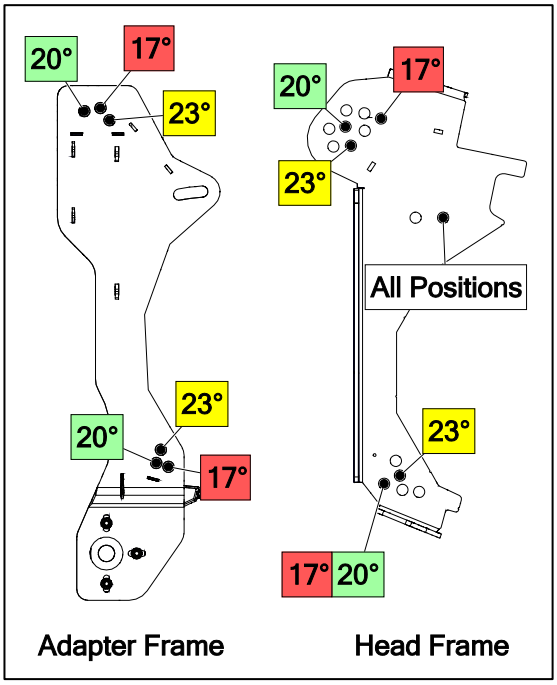

Cat/Claas/Lexion

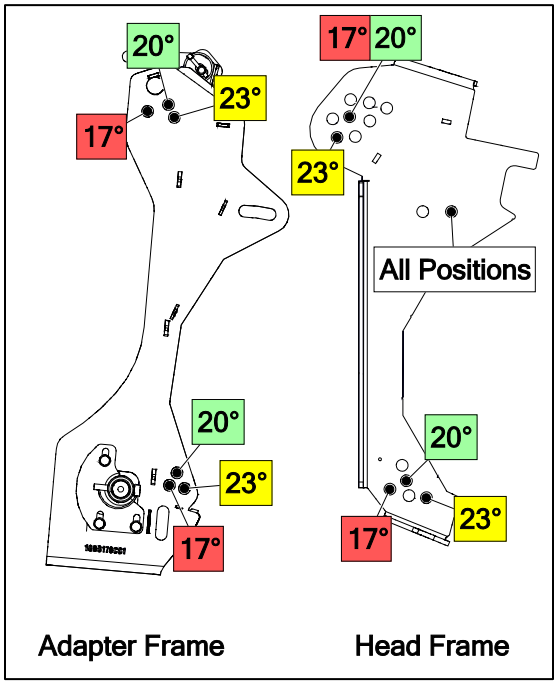

Case Old Gen

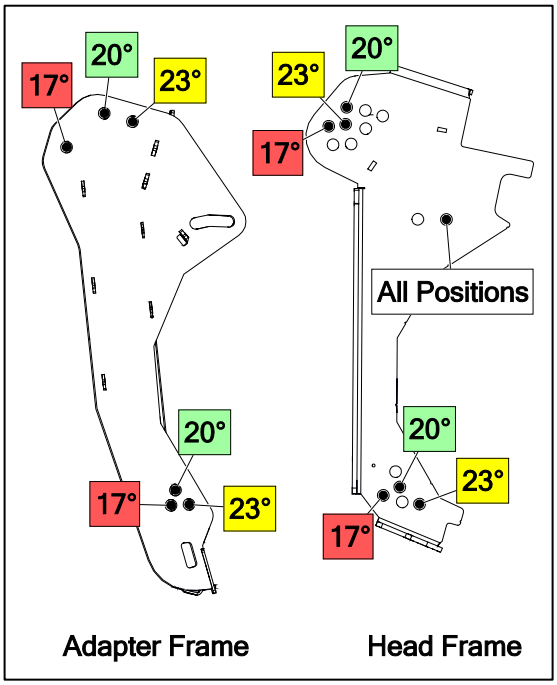

Case New Gen/New Holland

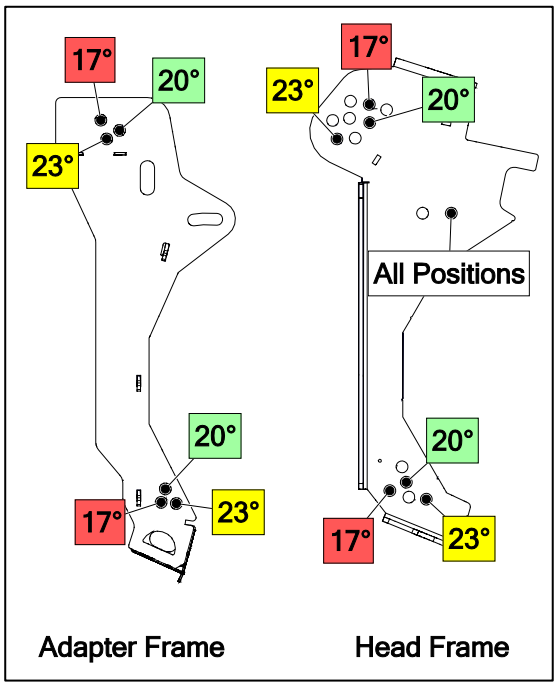

6.2 – Gathering Point Adjustments

Danger: Before repairing or adjusting any part of the corn head, engage the feeder house lift cylinder safety stops, set the parking brake, turn off the combine engine and remove the key and hang a warning sign on the operator's platform. Failure to do so could result in serious injury or death.

Important: The corn head angle must be correctly set prior to adjusting gathering points. See Section 6.1.

6.2.1 – Center Pivot Line

The center pivot line **(red line)** is a line that is projected straight outwards from the gathering chains to the ground. It is the break over point for the gathering points.

When the gathering points are set correctly as shown, the gathering points **(A)** are set above the center pivot line **(B)**. This allows the point to float upwards if a foreign object is encountered.

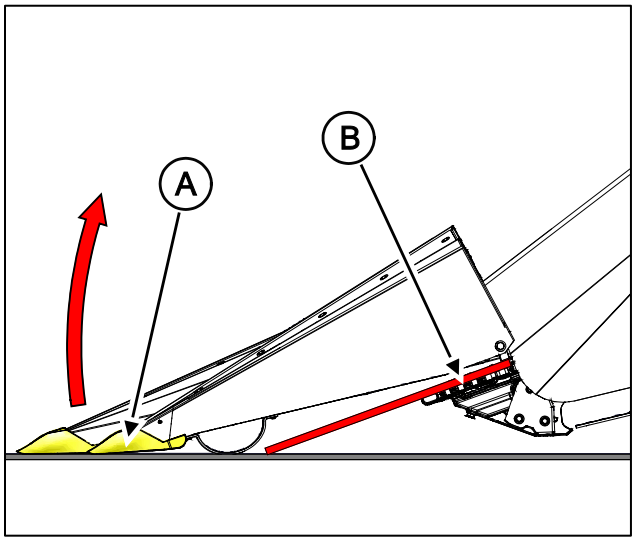

Correct

When the gathering points are set incorrectly the gathering points **(C)** are set below the center pivot line **(D)**. This causes the snout to try and move downwards causing damage to the snout and related parts.

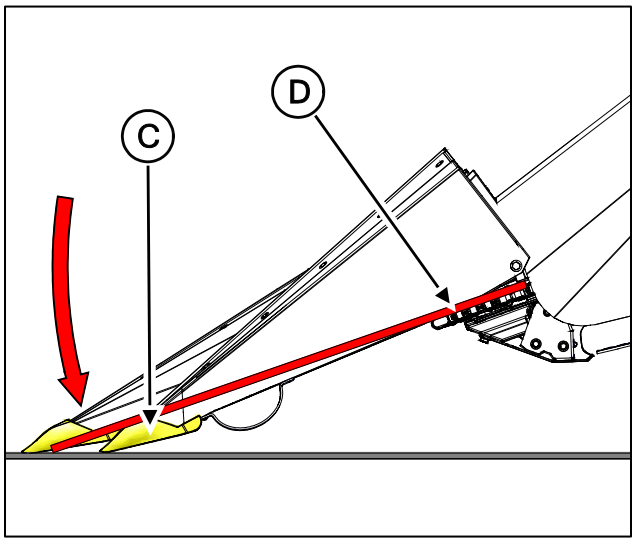

Incorrect

6.3 – Stalk Roller Knives

Danger: Before repairing or adjusting any part of the corn head, engage the feeder house lift cylinder safety stops, set the parking brake, turn off the combine engine and remove the key and hang a warning sign on the operator's platform. Failure to do so could result in serious injury or death.

The stalk roll knives are a replaceable and adjustable wear item.

Important: Ensure the row unit is not spread prior to adjusting or replacing knives. See Section 6.5 for more information.

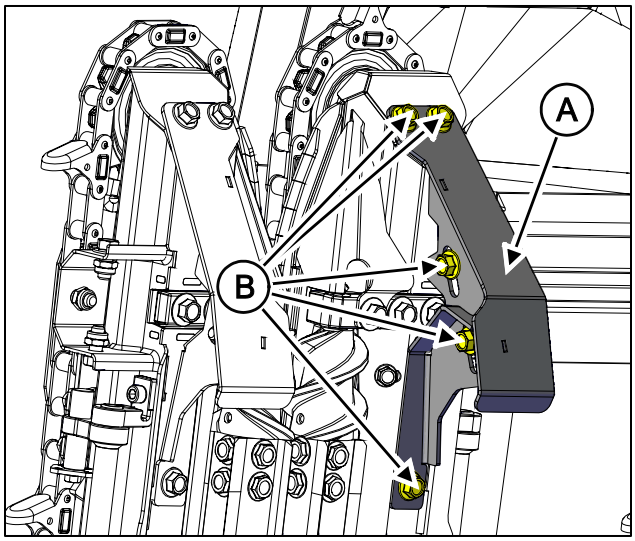

6.3.1 – Removing the Stalk Roller

1) Remove the five bolts **(B)** and the skid shoe **(A)** from the row unit.
2) Remove the inner bolt **(D)** on the front stalk roller support.
3) Remove the front stalk roller shield **(E).**
4) Reinstall the inner bolt **(D)** into the front stalk roller support.
5) Remove two outer bolts **(C)** on the stalk roller front support.
6) Pull outwards on the front of the stalk roller, while using a pry bar on the back of the stalk roller to remove it from the row unit gearbox.
7) Ensure the hex washer **(G)** between the rear of the stalk roller **(F)** and the row unit gearbox is removed.

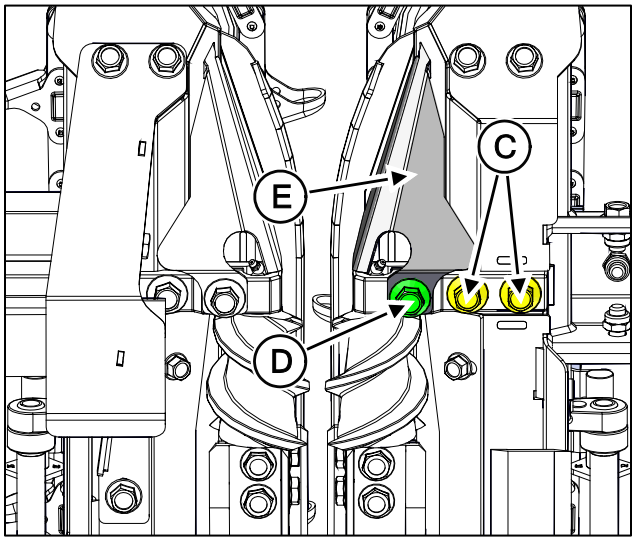

Important: The stalk roller knives are designed to be a knife-to-knife style roller system only. When placing the assembled roller in the main row unit gearbox ensure the knife tip are lined up with the adjacent stalk roller knife.

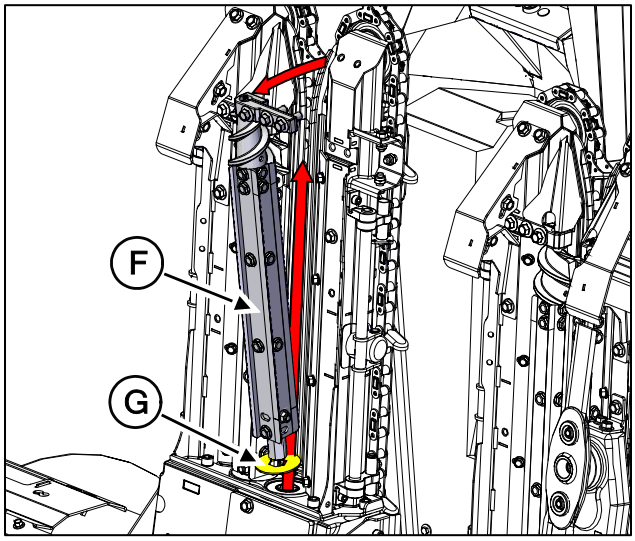

6.3.2 – Replacing Stalk Roller Knives

Important: It is critical when replacing stalk roller knives that they are positioned correctly on the stalk roller using tool ST-5. If the knives are not correctly positioned they can hit the opposing stalk roller during operation causing failure of the stalk roller or the row unit gearbox.

Note: *Individual stalk roller knives should never be replaced. They should always be replaced in groups of four.*

Note: *Never flip stalk roller knives. This will create a gap at the back of the stalk roller allowing crop material to wrap around the stalk roller damaging the row unit gearbox seals.*

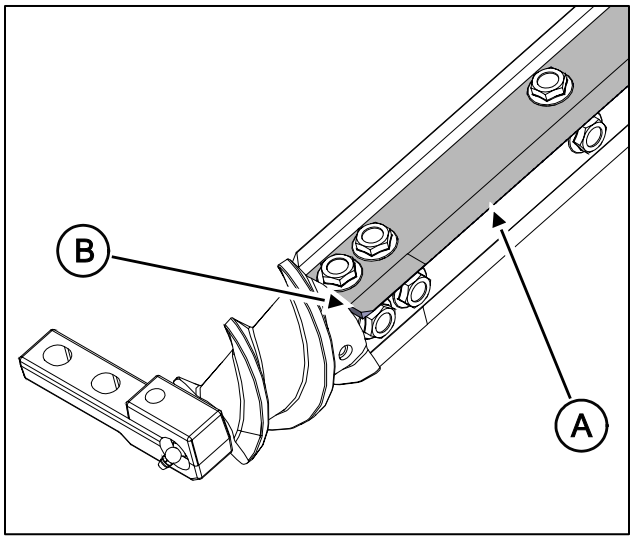

1) Inspect the stalk roller knives. If the wear extends midway between the second and third bolt **(A)** or if the wear extends past the hard face coating **(B)** the knives should be replaced.
2) Remove the stalk roller assembly. See Section 6.3.1
3) Remove five bolts **(C)** on the stalk roller
4) Remove the stalk roller knife **(D)**. Do not remove more than one stalk roller knife at a time.
5) Replace the stalk roller knife **(E)** and lightly tighten the five bolts **(F)**.
6) Place tool ST-5 **(G)** on the stalk roller knife at the front of the knife. The knife should be pushed out enough to contact tool ST-5.
7) Repeat the process at the rear **(H)** of the stalk roller knife.
8) Tighten the five bolts **(F)**.
9) Reinstall the stalk roller onto the row unit. See Section 6.3.1.
10) Rotate the stalk roller one full turn to ensure that none of the knives contact the knives on the opposing stalk roller or the trash knife. If any contact is observed repeat Steps 2-9.

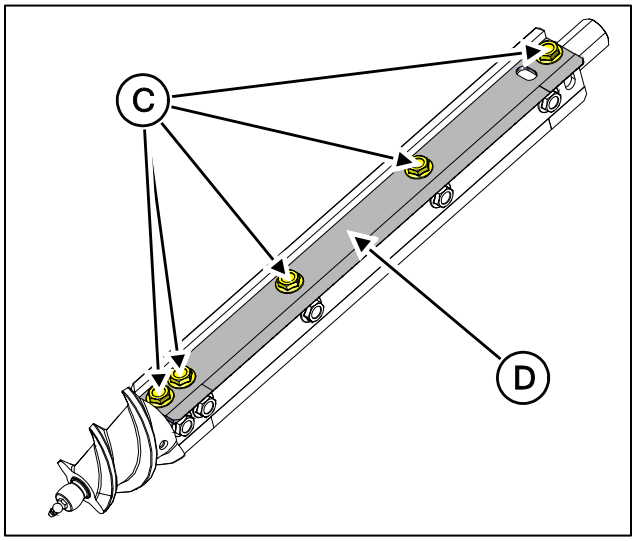

Note: *Do not slide tool ST-5 along the stalk roller knife blade. The hardened edge of the knife will cut into the edge of tool ST-5 causing the knife gap to be incorrect.*

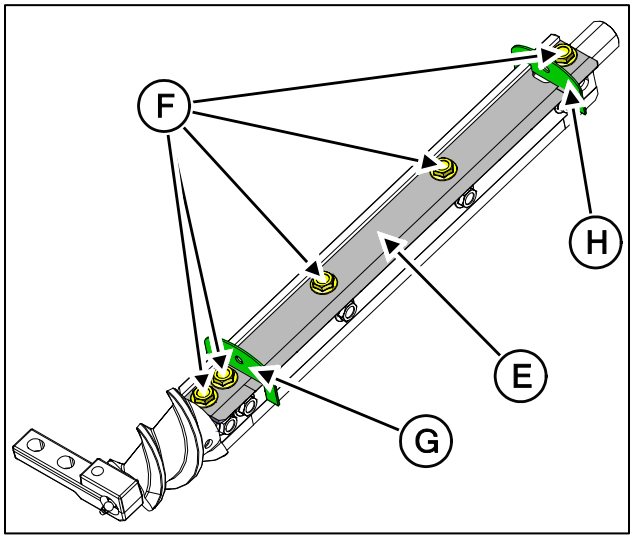

6.3.3 – Stalk Roller Adjustment

The front stalk roller supports on Drago GT corn heads can be adjusted side to side approximately 1/4" (6mm) by loosening the six M14 x 45 bolts **(I)** and sliding the stalk roller assembly **(J)** side to side.

Note: *The skid shoes were removed for clarification in the following pictures.*

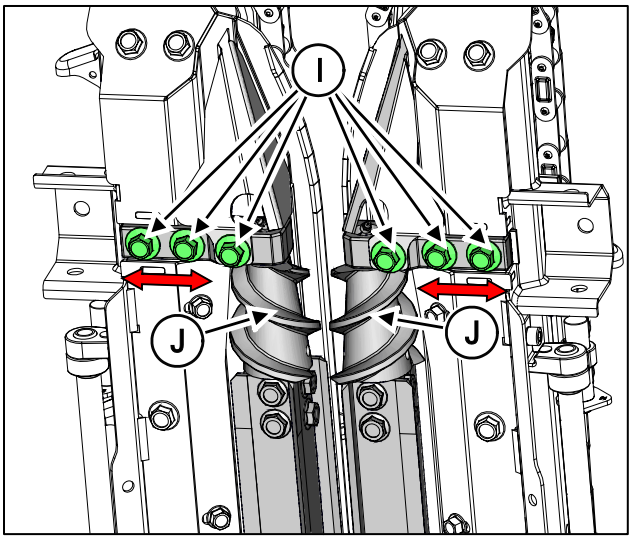

Important: To ensure the stalk rollers remain centered on the row unit when adjusting move both rollers by the same amount. If the rollers are not centered over the row unit excessive stalk whip and accelerated deck plate wear may be encountered.

Important: When adjusting the stalk rollers tighten the outer two mounting bolts on each side **(I)** followed by the inner mounting bolts **(I)**. This helps to maintain the proper alignment.

The recommended factory setting is with the stalk rollers moved all the way outwards. This helps to prevent the ear from being removed too far forward on the row unit.

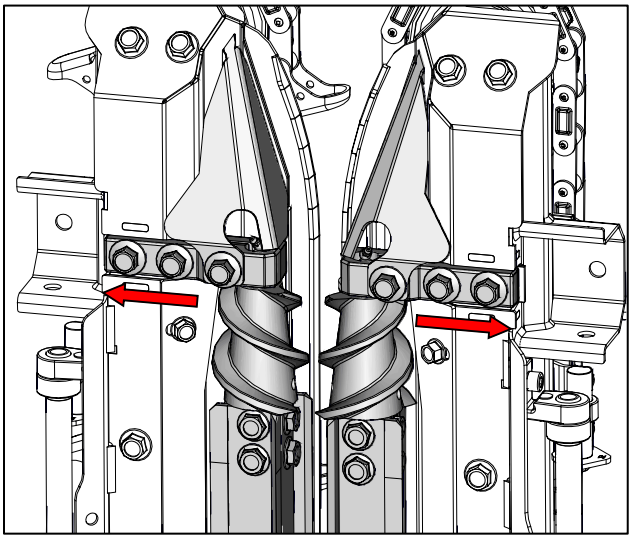

In certain conditions, such as extremely tall corn plants or spongy stalks, it may be necessary to move the stalk rollers closer together to become more aggressive. This helps to pull the corn plant down further forward on the row unit preventing it from breaking off at the rear of the row unit.

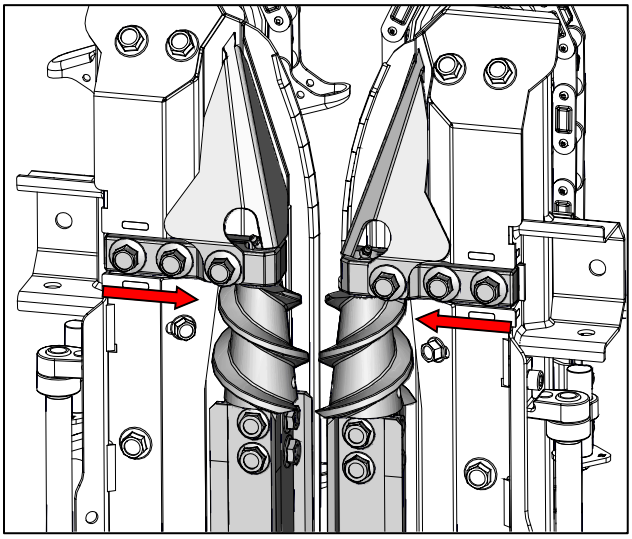

Important: When operating in extremely dry and brittle stalk conditions this may cause the stalks to break off and enter the corn head.

6.4 – Trash Knives

Danger: Before repairing or adjusting any part of the corn head, engage the feeder house lift cylinder safety stops, set the parking brake, turn off the combine engine and remove the key and hang a warning sign on the operator's platform. Failure to do so could result in serious injury or death.

Trash knives **(A)** prevent weeds and trash from wrapping around stalk rollers **(B)**. Trash knives must be set as close as possible to the stalk rollers without contacting one another.

Loosen four knife-attaching bolts **(C)** and adjust each trash knife to a maximum of 1/16" (1,5mm) clearance to the highest blade on the stalk roll.

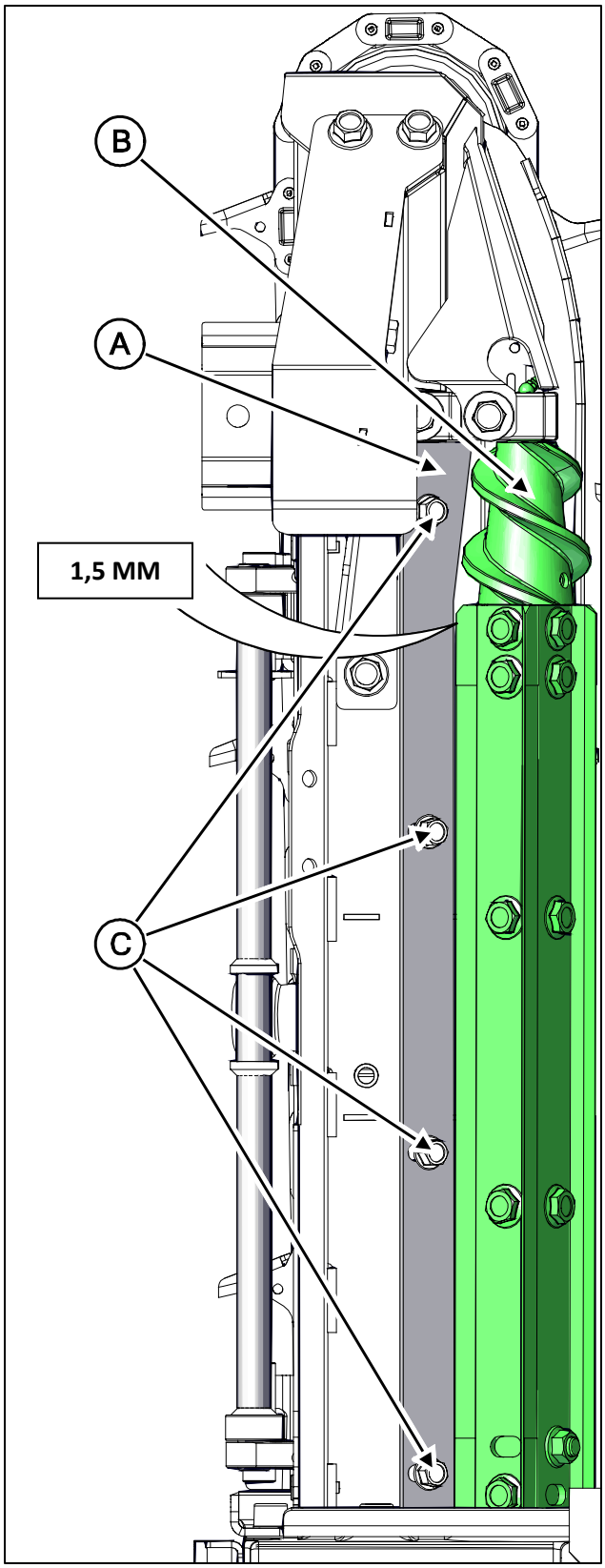

6.5 – Row Unit Alignment

Danger: Before repairing or adjusting any part of the corn head, engage the feeder house lift cylinder safety stops, set the parking brake, turn off the combine engine and remove the key and hang a warning sign on the operator's platform. Failure to do so could result in serious injury or death.

The alignment of the row unit is critical to ensure proper operation of the stalk rollers. If adjustment of the row unit is required, contact your Authorized Drago Dealer. The alignment should be checked both side-to-side and vertically.

Checking Side-To-Side Alignment:

1) Raise the corn head and engage the feeder house lift cylinder safety stops.
2) Shut off the combine engine and remove the key.
3) Rotate the stalk rollers until the knives are tip-to-tip.
4) The gap **(A)** at the front of new stalk roller knives should be 1/8" (3-4mm).

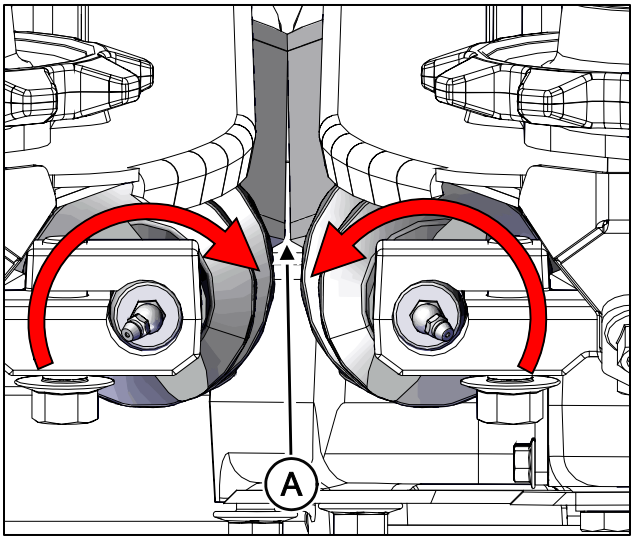

Checking Vertical Alignment:

1) Raise the corn head and engage the feeder house lift cylinder safety stops.
2) Shut off the combine engine and remove the key.
3) Turn the row unit by hand until two of the knife tips come together. The tips should be in line with one another.
4) If the tips do not line up, adjustment is required.

6.6 –Deck Plates

Danger: Before repairing or adjusting any part of the corn head, engage the feeder house lift cylinder safety stops, set the parking brake, turn off the combine engine and remove the key and hang a warning sign on the operator's platform. Failure to do so could result in serious injury or death.

The deck plate opening on the Drago GT corn head is tapered with a larger opening at the rear of the row unit as compared to the front. The deck plates are preset at the factory and should normally not require adjustment for most field conditions. Adverse field conditions; however, may require adjustment. The row unit alignment needs to be checked as described in Section 6.5 prior to adjusting deck plate clearance. Typical needs for adjustment are small ears, large stalks, drought stressed crop, stalks not entering deck plates, or harvesting specialty crops.

The factory settings for the deck plates are 7/8" (22mm) at the front and 1 1/16" (27mm) at the rear.

Note: *The cams may be installed at different settings from the factory when comparing rows. This is necessary to achieve the same deck plate opening on all row units due to manufacturing tolerances.*

6.6.1 – Maximum Opening

The maximum deck plate opening is controlled by the half-moon shaped cam **(A)** on top of the row unit frame.

1) Maximum possible opening is 1 1/8" (28mm) at the front, and 1 3/8" (35mm) at the rear.
2) To adjust loosen socket head bolt **(B)** and rotate the cam **(A)**.
3) The half-moon cams have numbers laser cut in them.
   a. Larger Number = Larger deck plate maximum opening.
   b. Smaller Number = Smaller deck plate maximum opening.

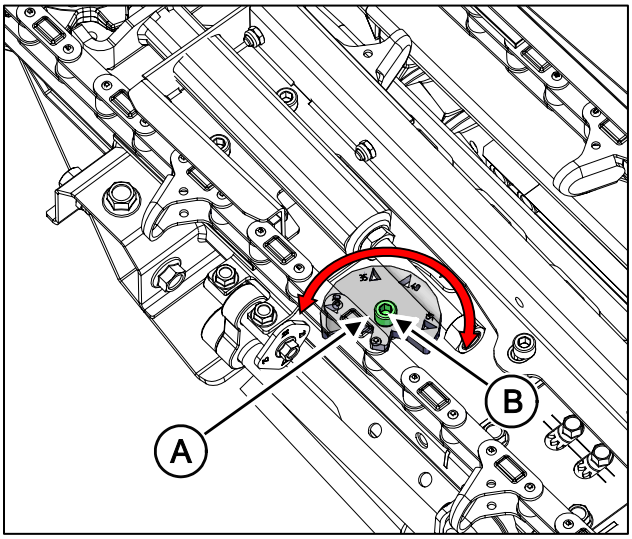

Checking Maximum Opening

Insert tool ST-7 **(C)** sideways in between the deck plates at the rear of the opening. Ensure the text "Max_R" is between the deck plates. Twist tool ST-7 **(C)** to expand the deck plates to their maximum setting. The deck plates should not be able to be manually opened any further.

Note: *The deck plate maximum opening does not need to be inspected on a regular basis. It requires inspection only if damage to the system is suspected or if conditions require changes to the maximum opening.*

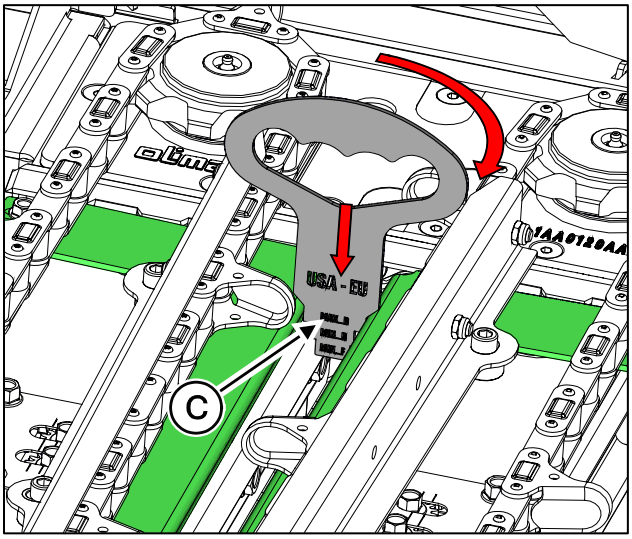

6.6.2 – Minimum Opening

The minimum deck plate opening is controlled by the four sided cam **(C)** on the side of the row unit frame.

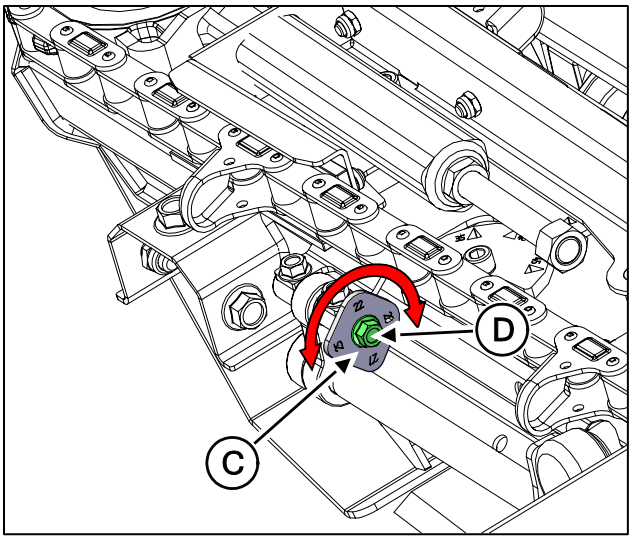

1) Minimum possible opening is 3/4" (19mm) at the front and 15/16" (24mm) at the rear.
2) To adjust loosen the flange bolt **(D)** and rotate the cam **(C)**.
3) The four sided cams have numbers laser cut in them.
   a. Larger Number = Larger deck plate minimum opening.
   b. Smaller Number = Smaller deck plate minimum opening.

Checking Front Minimum Opening

Insert tool ST-7 **(F)** in between the deck plates at the point where the curve at the front of the deck plate stops. Ensure that the text "Min_F" is between the deck plates. The deck plates should lightly touch tool ST-7 **(F)**. If the deck plates are pushed open or a gap exists between the tool and the deck plates the minimum opening setting should be adjusted.

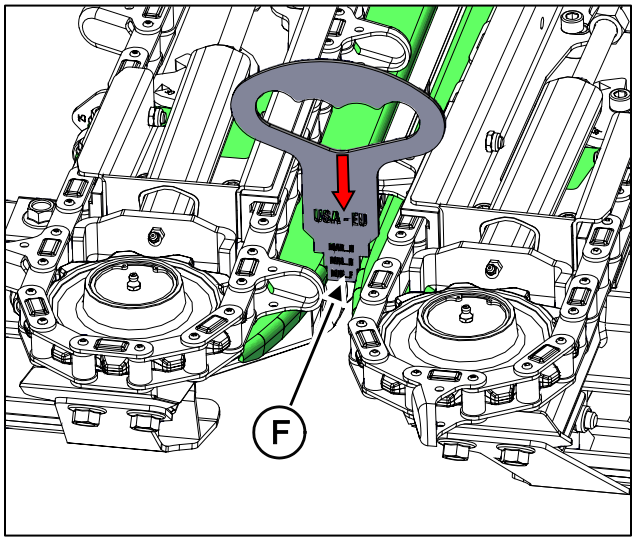

Note: *The front minimum opening is the critical measurement for correctly setting the deck plates and should be inspected periodically through the harvest season.*

Checking Rear Minimum Opening

Insert tool ST-7 **(G)** in between the deck plates at the rear of the opening. Ensure that the text "Min_R" is between the deck plates. The deck plates should lightly touch tool ST-7 **(G)**. The rear deck plate opening is not adjustable independent of the front opening.

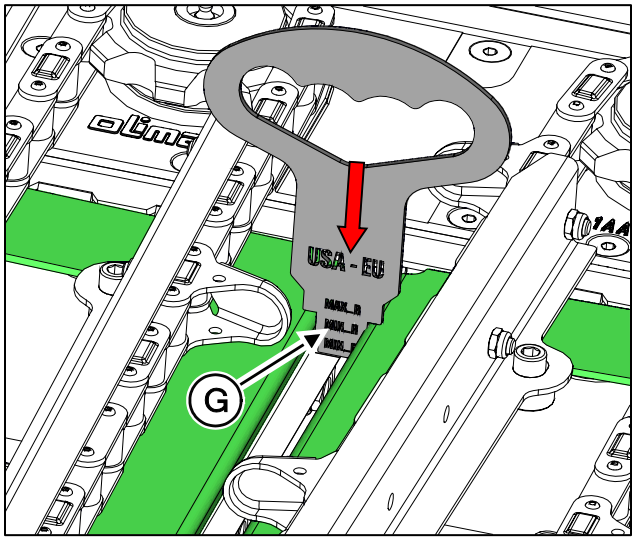

Note: *The deck plate rear minimum opening does not need to be inspected on a regular basis. It requires inspection only if damage to the system is suspected or if conditions require changes to the maximum*

opening.

6.6.3 – Deck Plate Tension

The return pressure of the deck plates can be adjusted on each individual deck plate.

1) Factory Setting: Adjustment bolts **(I)** should be centered between the two laser-etched lines.
2) To adjust loosen the two flange bolts **(H)** and turn the adjustment bolts **(I)**.
3) The two laser-etched lines **(J & K)** correspond to a minimum and maximum spring tensions.
   a. Outer Line **(J)** = Minimum spring tension.
   b. Inner Line **(K)** = Maximum spring tension.

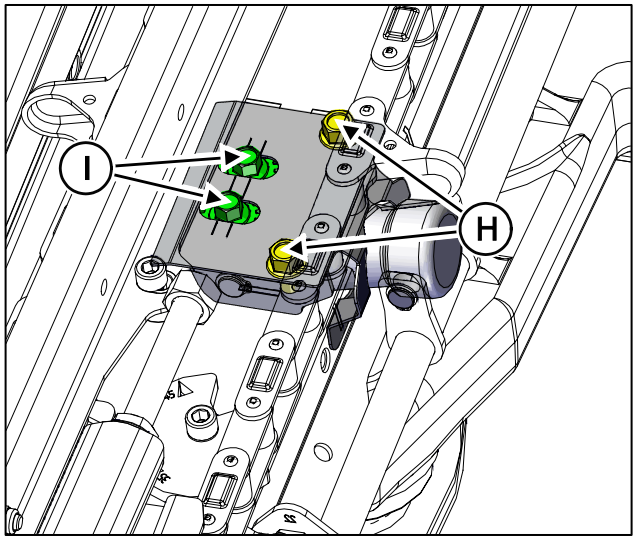

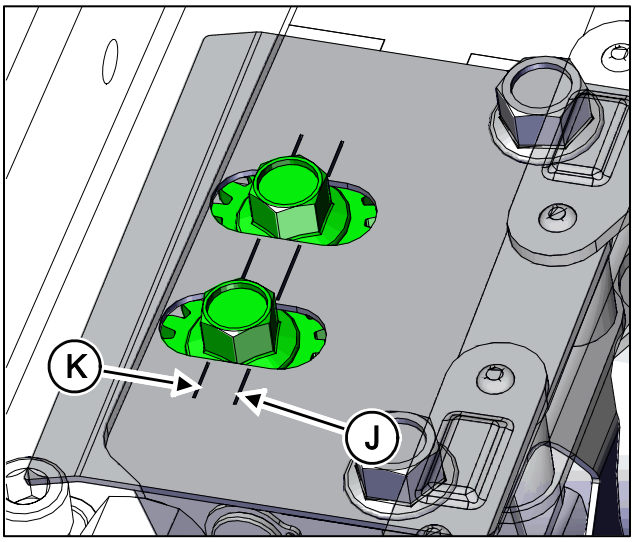

Left Side

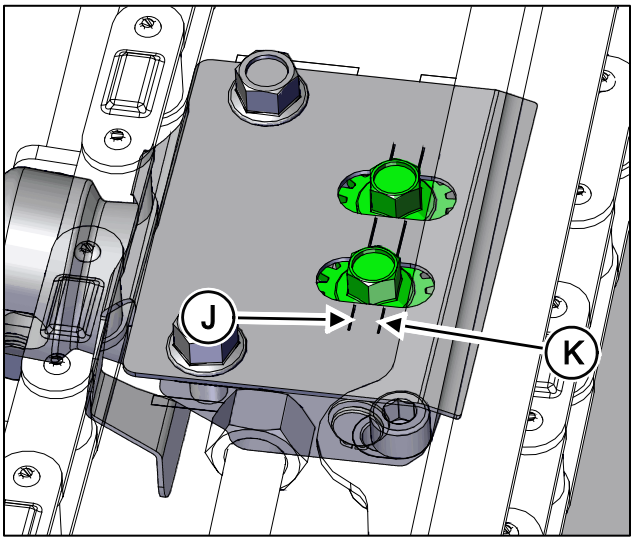

Right Side

6.7 – Gathering Chains

Danger: Before repairing or adjusting any part of the corn head, engage the feeder house lift cylinder safety stops, set the parking brake, turn off the combine engine and remove the key and hang a warning sign on the operator's platform. Failure to do so could result in serious injury or death.

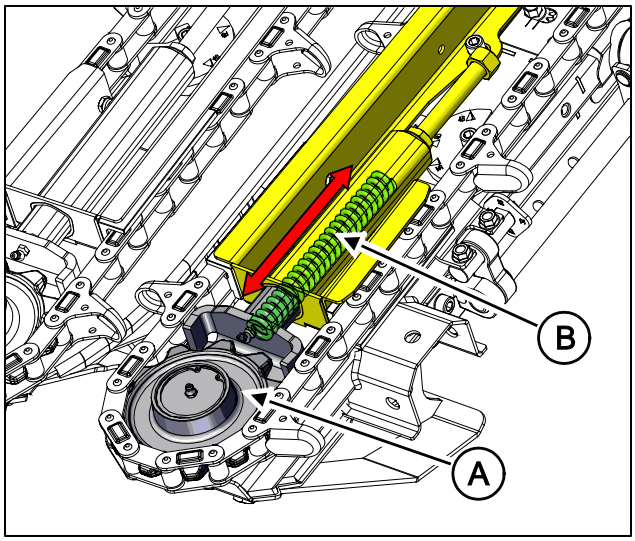

6.7.1 – Gathering Chain Tension

The gathering chain tension is maintained by a spring-loaded tensioner **(A)**. The spring **(B)** is housed inside a stationary tube with a spacer inside the spring. The spacer serves as a stop to keep the idler sprocket from retracting too far.

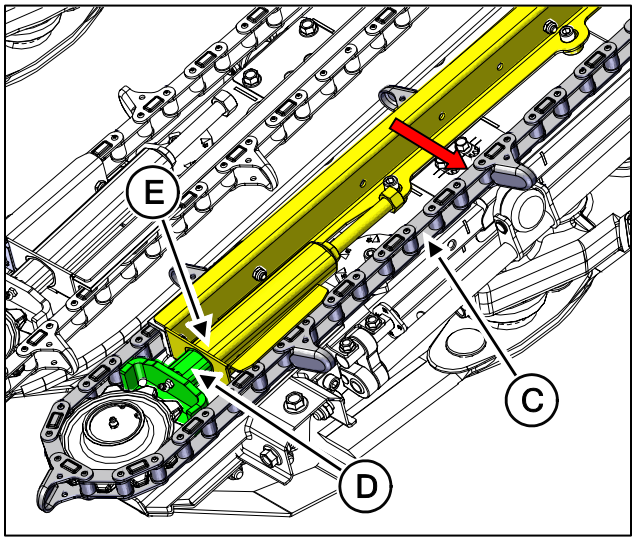

Checking Chain Tension:

1) Pull the gathering chain **(C)** outwards, at the location of the red arrow, until the tensioning fork **(D)** bottoms out.
2) Mark the tensioning fork **(D)** where it enters the gathering chain guide **(E)**.
3) Release the gathering chain and measure the distance between the mark made in Step 2 and the gathering chain guide **(E)**.
a. Distance between the mark and the gathering chain guide should be 1/4" to 5/16" (6mm to 8mm).

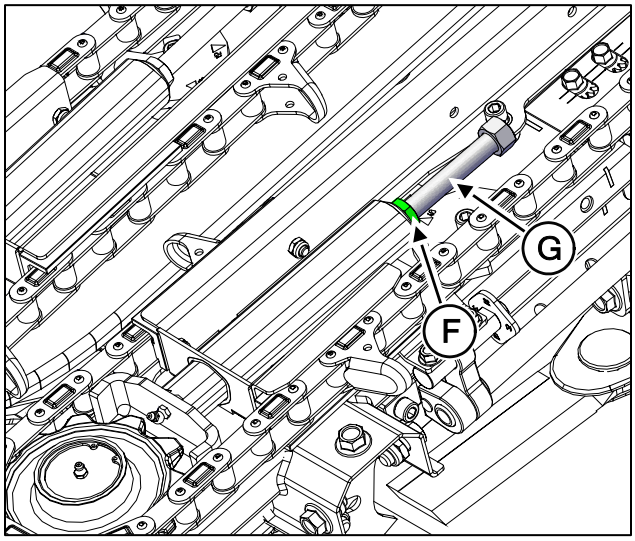

Tensioning:

1) Check the gathering chain tension as outlined above.
2) Loosen the jamb nut **(F)**.
3) Tighten or loosen the tensioning bolt **(G).**
  a. Tighten = more chain tension
  b. Loosen = less chain tension
4) Re-check the gathering chain tension as outlined above.
5) Once the gathering chain tension is correct tighten the jamb nut **(F)**.

6.7.2 – Replacing Gathering Chains

It is important to inspect the gathering chain periodically to determine the amount of stretch. As the gathering chain wears, it will begin to stretch. When the gathering chain reaches three percent stretch it has reached the end of its life.

Note: *The gathering chains should not continue to be run after they reach three percent total stretch. Failure to replace the gathering chains can result in breakage of the gathering chain and the possibility of the gathering chain entering the combine. Damage to the tensioning fork and gathering chain guide can also occur.*

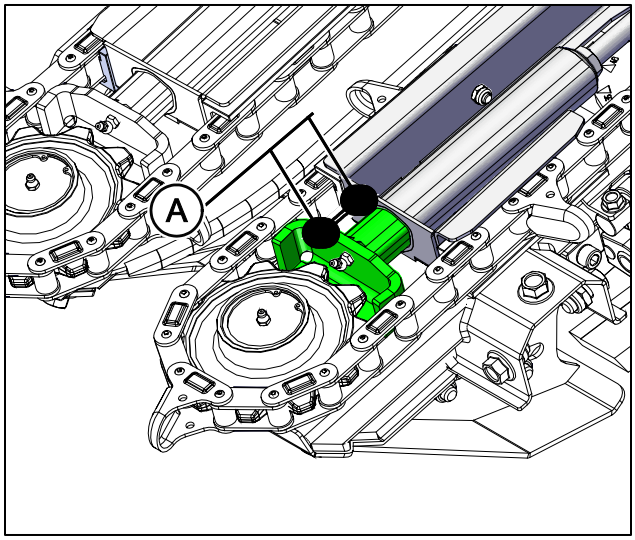

Inspection for Replacement:

i. Tension the gathering chain. See Section 6.7.1
ii. Measure the distance **(A)** between the rear surface of tensioner fork and the front surface of the gathering chain guide.

a. New gathering chains will have an approximate measurement of 1 7/16” (37mm).
b. A gathering chain with three percent stretch will have an approximate measurement of 2 5/8” (67mm).

Gathering Chain Replacement:

1) Loosen jamb nut **(B)**.
2) Loosen the tensioner bolt **(C)** until it stops.

Note: *The tensioner bolt **(C)** cannot be removed from the tensioner tube.*

3) Place a clamp **(D)** on the gathering chain tensioner **(E)** to compress the tensioner assembly.
4) Remove the four bolts **(F)** from the gathering chain guide and loosen the rear poly frame pivot bolt **(G)**.
5) Remove the gathering chain guide assembly **(H)** from the row unit.
6) Replace the gathering chain **(I)**.
7) Ensure the new gathering chain is timed correctly to the corresponding chain. See Section 6.7.3.
8) Reinstall the gathering chain guide assembly **(H)**. The gathering chain guide should be installed in the outermost position of the slots. See Section 6.7.4.
9) Tension the gathering chain. See Section 6.7.1.

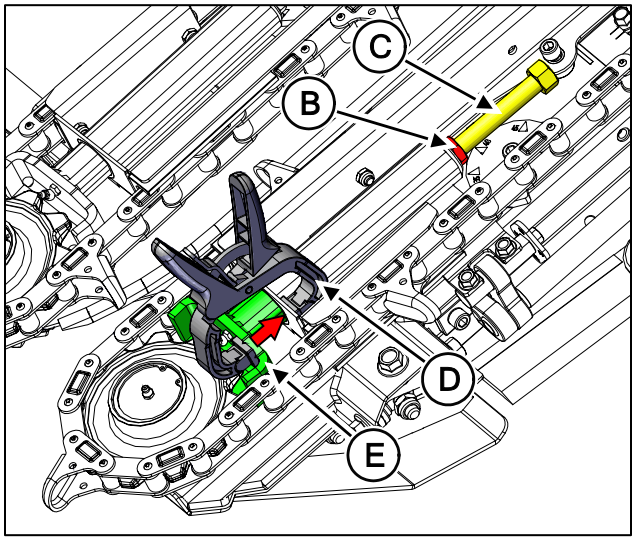

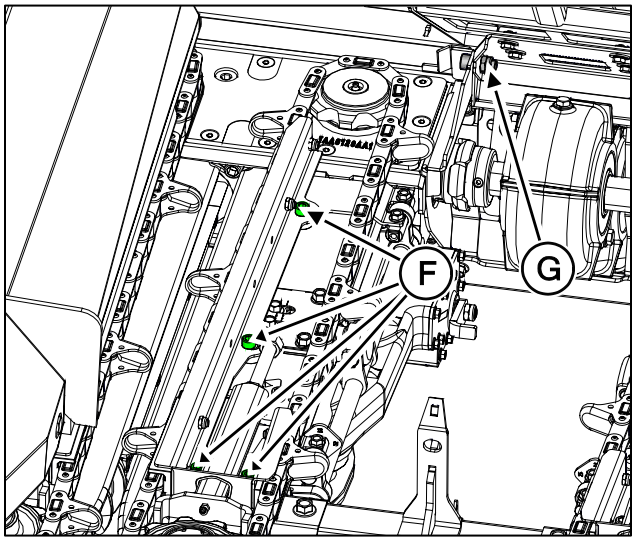

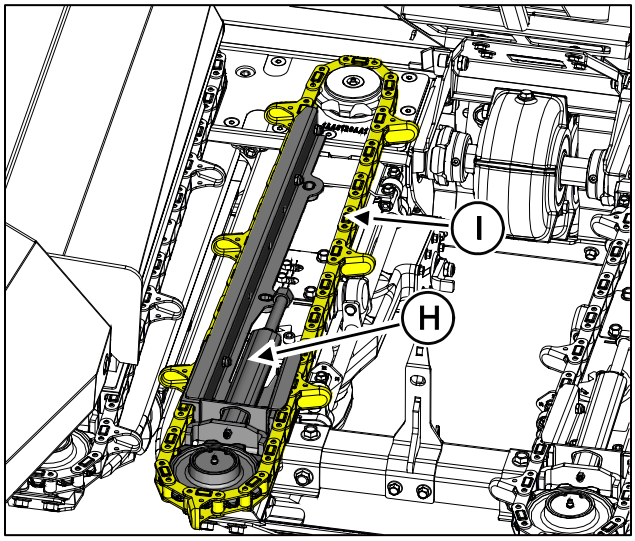

6.7.3 – Gathering Chain Timing

Under normal conditions the gathering chain should be timed in a staggered pattern **(F)**. For severely down corn it may be necessary to retime the chains. They should be retimed where one lug is running immediately behind the opposing lug **(G)**. Never run the gathering chains with the lugs in line with one another, or damage may occur.

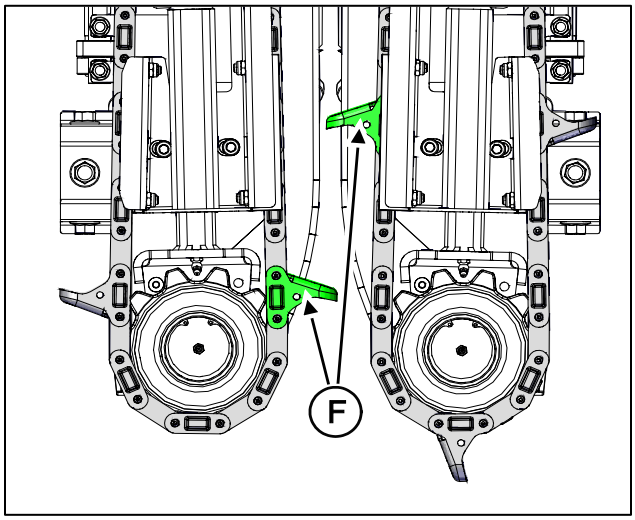

Factory Setting (Recommended)

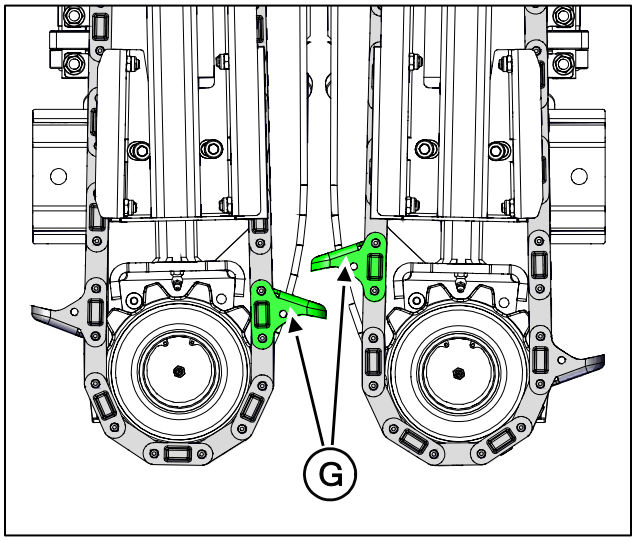

Down Corn

Gathering Chain Re-Timing

1) Remove the two M12 x 25 flange bolts **(H)** securing tool ST-8 **(I)** to the corn head mainframe.

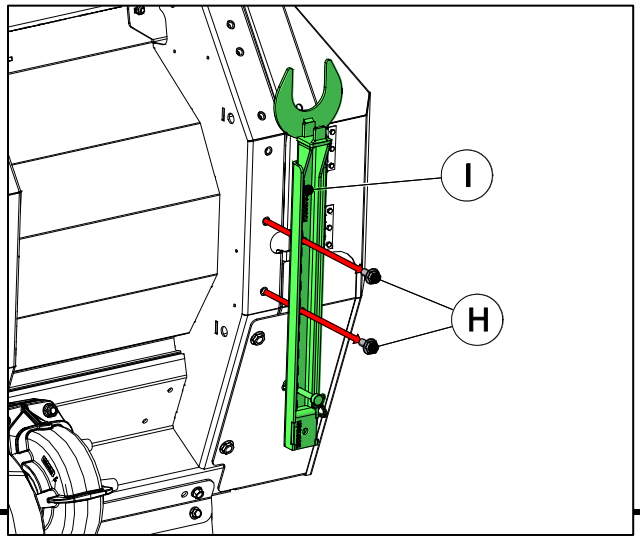

2) Remove the quick release pin **(J)** from tool ST-8.
3) Rotate tool ST-8 **(I)** upper handle and reinstall the quick release pin **(J)**.

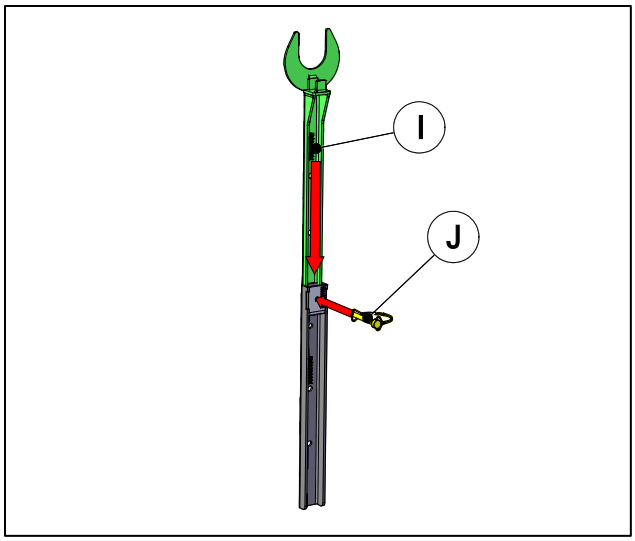

4) Insert a block of wood **(K)** in between the stalk rollers & deck plates **(L)** on the row to be retimed.

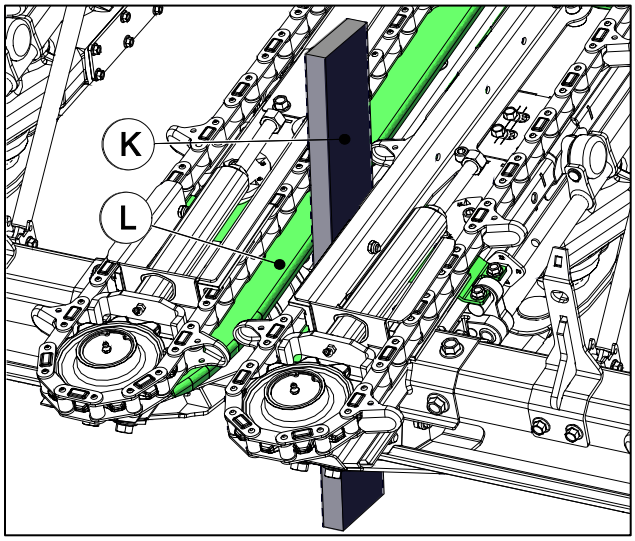

5) Insert the wrench end of tool ST-8 **(I)** on the gathering chain idler sprocket **(M)**.

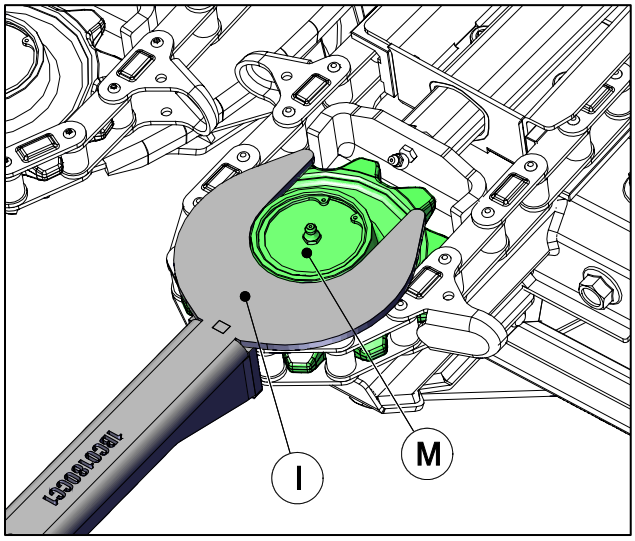

6) Insert the bottom alignment tab on tool ST-8 **(I)** between two gathering chain links **(N)**.

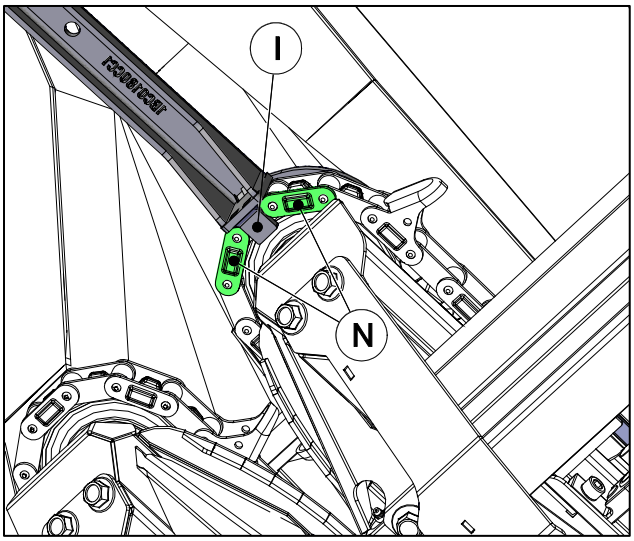

7) Rotate the tool ST-8 **(I)** until the gathering chain has reached the desired timing.

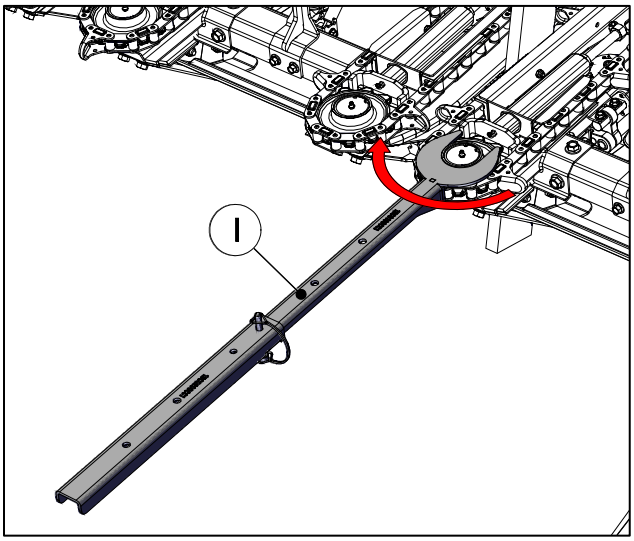

6.7.4 – Gathering Chain Guide Position

The gathering chain guides on the Drago GT corn head can be move side to side to help provide more aggressive feeding of material in down corn conditions. The gathering chain guides should only be moved if tough feeding conditions are encountered. They should be moved back to the factory settings when not operating in down corn.

1) Loosen, but do not remove, the four bolts **(O)** securing the gathering chain guide.
2) Move the gathering chain guide **(P)** to the desired position.
   a. Factory Setting = Chain guide toward the outside of the row unit.
   b. Down Corn = Chain guide toward the center of the row unit.
3) Tighten the four bolts **(O)**.

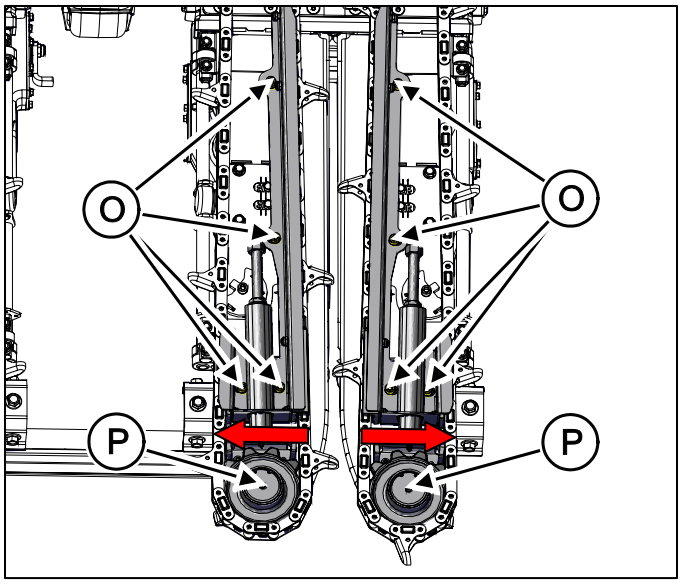

Factory Setting (Recommended)

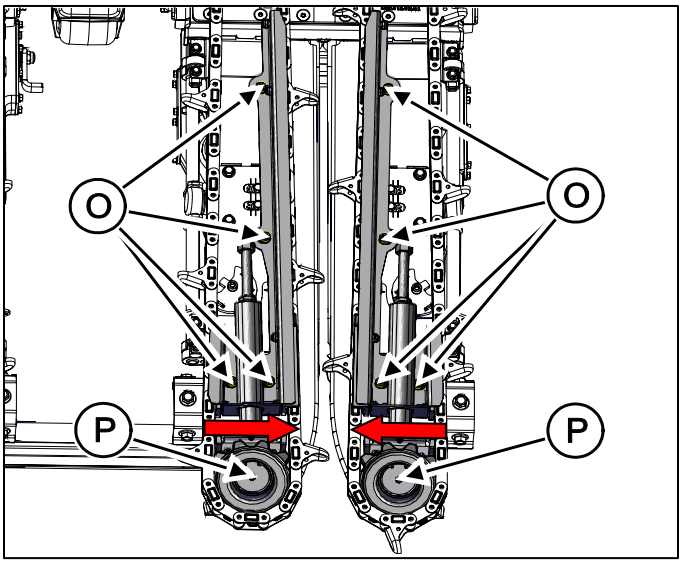

Down Corn

6.8 Back-feed Shield

All Drago GT corn heads come equipped with a back-feeding shield **(A)** to help contain any material that may back-feed down the combine feeder house. The back-feed shield is adjustable up and down to accommodate different makes of combines. The recommended starting position of the back-feed shield is fully raised. If back-feeding in the combine feeder house is observed, or if ears are being thrown forward out of the corn head the shield should be lowered until the condition is resolved.

Note: *John Deere combines require the back-feed shield to be in the fully raised position to avoid contact with the shield over the feeder house opening on the combine.*

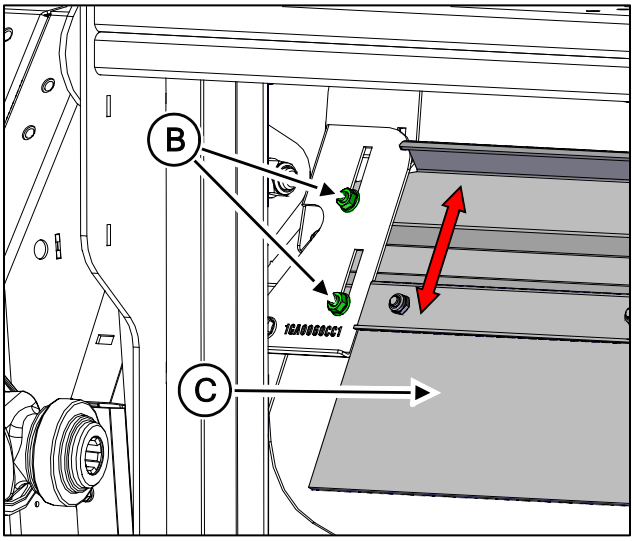

Adjustment:

1) Loosen the two M10 flange nuts **(B)** on the left side and the two on the right side (not shown) of the back-feed shield.
2) Move the back-feed shield **(C)** up/down in the slots to the desired position.
3) Tighten the four M10 flange nuts **(B)** loosened in Step 1.

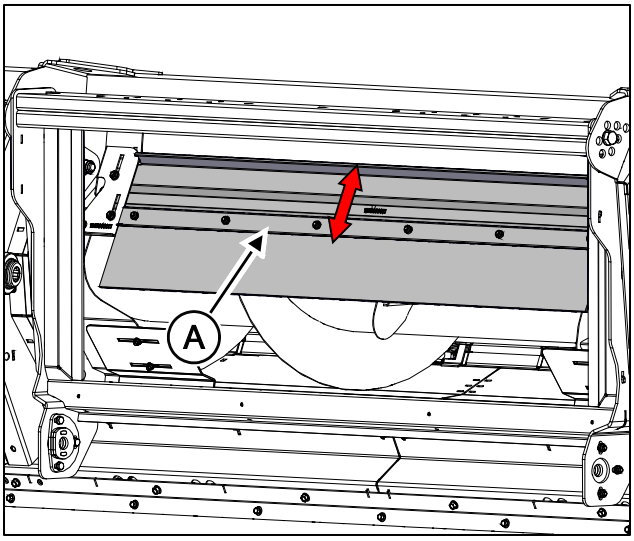

Section 7 – Lubrication/Maintenance

Failure to perform the required maintenance can result in an inefficient use of the corn head and a consequent waste of time.

The recommended maintenance intervals refer to average working conditions.

Perform maintenance more frequently when you operate a combine in difficult working conditions, due to external factors such as the weather or the type of field harvested.

The procedures described in this chapter can be performed only by qualified, trained and authorized personnel having appropriate expertise and experience.

Before starting any work operation, wear suitable PPE.

All interventions are to be performed only after securing the machine as described in this manual.

Danger: before lubricating or maintaining any part of the corn head, activate the feeder safety stop supports, the brake, turn off the combine, remove the key and put a warning sign on the operator's platform. Otherwise you risk serious injury or death.

Important: Do not use high-pressure water jets directly onto the bearings or on any other element that can easily be affected by infiltrations for cleaning purposes. High-pressure water can pass through the seals and cause damage. Dry these areas and, after lubricating them, run and test the equipment out of the field for a few minutes.

Maintenance can be categorized in three types:

1) **Pre-Season Maintenance** – This type of maintenance is carried out after the corn head is removed from storage at the beginning of the season. This is mainly an inspection of fluid levels and ensuring no damage occurred during storage.
2) **In-Season Maintenance** – This type of maintenance must be carried out in relationship to the recommended lubrication guide. This type of maintenance should not be postponed.
3) **Post-Season Maintenance** – This maintenance is carried out at the end of the season to ensure and preserve the efficiency as well as proper operation of the corn head for the following season.

Important: Failure to complete the required maintenance may cause poor performance and unnecessary downtime. Follow lubrication and maintenance intervals as noted on Table 7.3.1 for normal harvest conditions. If running in down corn or severe conditions follow lubrication and maintenance intervals indicated on Table 7.3.2. Failure to follow this maintenance schedule may cause component failure.

Pre-Season Maintenance

Careful inspection of the corn head following removal of the corn head from annual storage will prevent any damage due to fluid leaks or other damage incurred during storage.

1) Inspect the corn head for any fluid leaks. Replace any seals that are leaking or damaged.
2) Inspect the corn head for any damage that may have occurred while in storage.
3) Check all fluid levels according to the instructions in Section 7.4.
4) Attach the corn head to the combine and operate at low speed to ensure all parts of the corn head rotate.

In-Season Maintenance

Careful inspection and service of the corn head prior to operation each day will prevent unnecessary breakdowns and delays in the field. Make the following checks and adjustments prior to operation each day:

- Clean the corn head of all dirt and debris periodically to aide in inspections.
- Always verify that there is no loss of oil or broken parts in areas to be greased. Be alert for loose/missing hardware and tighten/replace as required.
- Lubricate the corn head according to the instructions on Tables 7.3.1 and 7.3.2 of this manual.
- Pay special attention to the condition of the stalk chopper knives, if equipped. If damage occurs replace the knives immediately. Always replace the knives in pairs to maintain proper balance.

Danger: Stop harvest immediately if any missing or damaged chopper knives are observed. This is essential to prevent further damage to the corn head and to prevent serious injury or death.

Post-Season Maintenance

Careful inspection and service of the corn head following harvest will prevent unnecessary breakdowns and delays in the field during the next season. Make the following checks and adjustments at the end of the harvest season:

- Completely inspect the entire corn head for any damage, failed parts, or loose/missing hardware.
- Thoroughly clean the corn head of all dirt and debris. Do not use high pressure water near any seals, as this can force debris and water past the seals.
- Lubricate and perform maintenance to the corn head according to the instructions on Tables 7.3.1 and 7.3.2 of this manual. Always lubricate the corn head after cleaning.
- Pay special attention to the condition of the stalk chopper knives, if equipped. If damage occurs replace the knives immediately. Always replace the knives in pairs to maintain proper balance.

Whenever possible, store lubricants and containers in an area protected from dust, moisture and other contaminants. Do not store tubes of Mobilux EP 0 grease on their side to avoid any grease leaking out of the container. Keep the plastic cap on all grease tubes to avoid any water or dirt contamination. Make certain that all containers are properly marked to identify their contents. Properly dispose of all old containers and any residual lubricant they may contain.

Important: Some grease points require a specific amount of grease, so it is important to know the amount of grease per pump the grease gun being used puts out. Some grease guns may put out as little as 1/2 gram per pump, while others many put out as much as 3 grams per pump. Over greasing these areas may cause premature failure of the part or connected parts.

Important: Use only original *OLIMAC SRL* spare parts and lubricants. Failure to use approved lubricants can cause unnecessary downtime and will void all warranty.

7.1 – Lubrication Type & Capacities

Table 7.1 – Required Fluids

Location	Capacity	Lubricant
Intermediate Gearbox	47 oz (1.4L)	Mobil SHC 634 Synthetic Oil
Row Unit Gearbox (Non-chopping)	98 oz. (2.9L)	Mobil SHC 634 Synthetic Oil
Row Unit Gearbox (Single Chop)	179 oz. (5.3L)	Mobil SHC 634 Synthetic Oil
Row Unit Gearbox (Twin Chop+)	193 oz. (5.7L)	Mobil SHC 634 Synthetic Oil
Auger Gearbox	85 oz. (2.5L)	Mobil SHC 634 Synthetic Oil
HD Gearbox	71 oz. (2.1L)	Mobil SHC 634 Synthetic Oil
HD Gearbox With Step-Up Gearbox	71 oz. (2.1L)	Mobil SHC 634 Synthetic Oil
Gathering Chains	-	SAE 30W Oil
Stalk Rollers	-	Mobilux EP 0 Grease
Gathering Chain Tensioner	-	Mobilux EP 0 Grease
Gathering Chain Drive Sprocket	-	Mobilux EP 0 Grease
Gathering Chain Idler Sprocket	-	Mobilux EP 0 Grease
Folding Joints	-	Mobilux EP 0 Grease
Jack Shaft Bearings	-	Mobilux EP 0 Grease
PTO Drive Shafts	-	Mobilux EP 0 Grease
Cross Auger Slip Clutch	-	Mobliux EP 0 Grease

7.2 – Lubricant Part Numbers

Lubricant	Size	Part Number
Mobilux EP 0 Grease	14 oz (414mL) Tube - Case of 10	GR-1000T
Mobil SHC 634 Synthetic Oil[1]	1 Quart (0.9L) - Single	DR-mob634-qt
Mobil SHC 634 Synthetic Oil[1]	Case - 12 Quarts	DR-mob634-case
Mobil SHC 634 Synthetic Oil[1]	5 Gallon Bucket	DR-mob634-5gal

Table 7.2 – Lubricant Part Numbers

[1] *Mobil SHC 634 is the North American equivalent of ISO 460 and ISO VG 460 oils.*

7.3 – Lubrication Schedule

Table 7.3.1 – Normal Operation

Interval	Area	Check	Adjust	Lubricate
Pre-Season	Intermediate Gearbox	X		
	HD Drive Gearbox	X		
	Step-up Gearbox (*if equipped*)	X		
	Auger Drive Gearbox	X		
	Row Unit Gearbox	X		
	Gathering Chain Tension		X	
	Stalk Roller Pinch Point		X	
Every 20 Hours	Chopping Knives (*if equipped*)	X		
	Stalk Rollers			X
	Folding Tow Shaft Coupler (*folding only*)			X
Every 100 Hours	Intermediate Gearbox	X		
	Row Unit Gearbox	X		
	HD Drive Gearbox	X		
	Step-up Gearbox *(if equipped)*	X		
	Auger Drive Gearbox	X		
	Gathering Chain Tension		X	
	Clean Deck Plates		X	
	Jackshaft Bearings			X
	Gathering Chain Tensioner			X
	Gathering Chain Upper Sprocket			X
	Gathering Chain Idler Sprocket			X
	PTO Drive Shafts			X
Every 250 Hours or Yearly	Perform 20hr Service	X		
	Perform 100hr Service	X		
	Gathering Chain Wear Guides	X		
	Gathering Chains			X
	Folding Joints (*folding only*)			X
	Cross Auger Slip Clutch			X

Table 7.3.2 – Down Corn / Severe Service

Interval	Area	Check	Adjust	Lubricate
Pre-Season	Intermediate Gearbox	X		
	HD Drive Gearbox	X		
	Step-up Gearbox (*if equipped*)	X		
	Auger Drive Gearbox	X		
	Row Unit Gearbox	X		
	Gathering Chain Tension		X	
	Stalk Roller Pinch Point		X	
Daily	Chopping Knives (*if equipped*)	X		
	Gathering Chain Tension		X	
	Stalk Rollers			X
	Gathering Chain Idler Sprocket			X
	Gathering Chain Tensioner			X
Every 20 Hours	Folding Tow Shaft Coupler (folding only)			X
Every 100 Hours	Row Unit Gearbox	X		
	Intermediate Gearbox	X		
	Auger Drive Gearbox	X		
	HD Drive Gearbox	X		
	Step-up Gearbox (*if equipped*)	X		
	Clean Deck Plates		X	
	Jackshaft Bearings			X
	Gathering Chain Upper Sprocket			X
	PTO Drive Shafts			X
Every 250 Hours or Yearly	Perform 20hr Service	X		X
	Perform 100hr Service	X		X
	Gathering Chain Wear Guides	X		
	Gathering Chains		X	X
	Folding Joints (*folding only*)			X
	Cross Auger Slip Clutch			X

7.4 – Pre-season

Danger: Before lubricating or performing maintenance on any part of the corn head, engage the feeder house lift cylinder safety stops, set the parking brake, turn off the combine engine and remove the key and hang a warning sign on the operator's platform. Failure to do so could result in serious injury or death.

Important: Do not lubricate any part of the corn head when it is new. All parts come pre-filled with the correct amount of lubricant from the factory.

The following lubrication schedule is recommended for normal harvest conditions.

7.4.1 – Pre-Season Fluid Check

Intermediate Gearbox

Prior to seasonal operation inspect the oil level in the intermediate gearbox. Raise the corn head completely and remove the check plug **(A)**. *Raise the corn head to maximum height*. The oil level should be at the check plug **(A)**. If additional oil is needed remove the breather **(B)**.

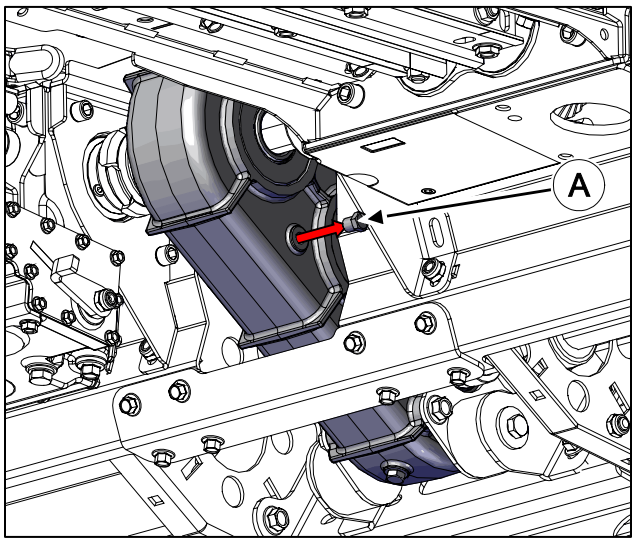

Lubricant Type:
Mobil SHC 634

Capacity:
47 oz (1.4L)

Danger: After raising the corn head engage the feeder house lift cylinder safety stops. Failure to do so could result in serious injury or death.

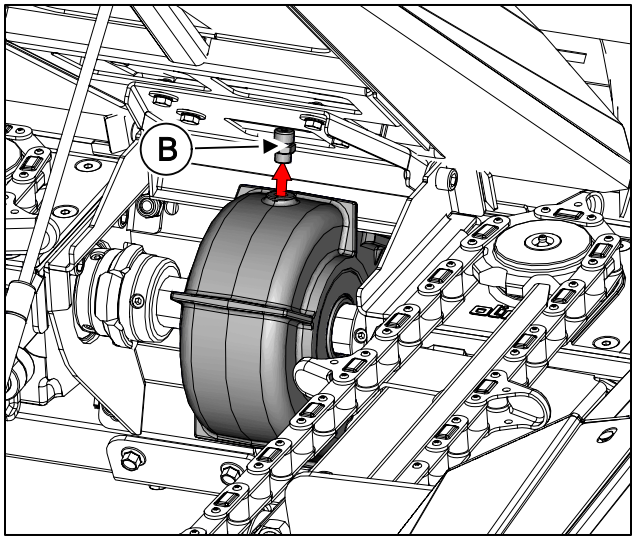

Heavy Duty Drive Gearbox

Prior to seasonal operation inspect the oil level in the heavy duty drive gearbox. *Raise the corn head to maximum height* and remove the check plug **(A)**. If additional oil is required, remove the breather **(B)**.

Lubricant Type:
Mobil SHC 634

Capacity:
71 oz (2.1L)

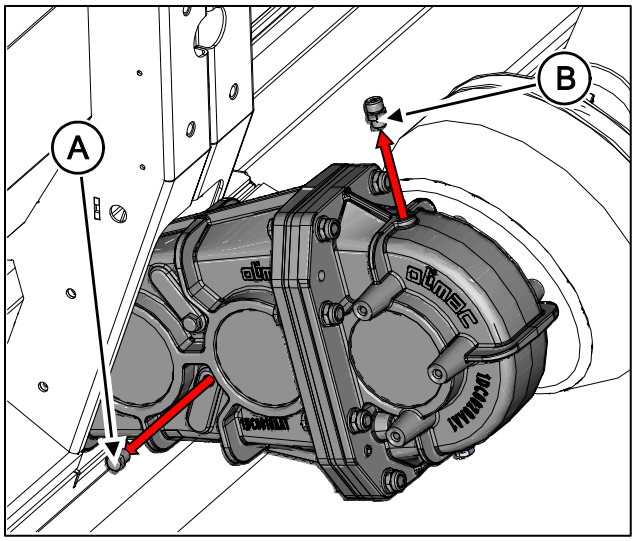

Step-up Gearbox *(if equipped)*

Some combine models require a step-up gearbox to prevent extreme PTO shaft angles. Prior to seasonal operation inspect the oil level. *Raise the corn head to maximum height* and remove the lower check plug **(A)**. If additional oil is required, remove the fill plug **(B)**.

Lubricant Type:
Mobil SHC 634

Capacity:
71 oz (2.1L)

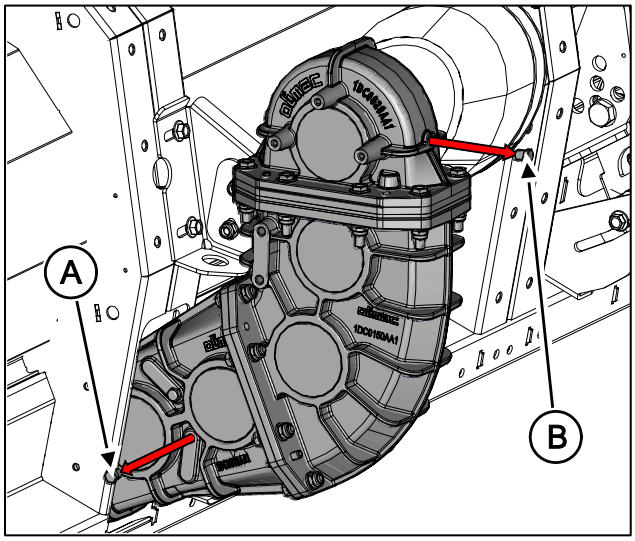

Auger Drive Gearbox

Prior to seasonal operation inspect the oil level in the auger drive gearbox. *Lower the corn head to operating height* and remove the check plug **(A)**. If additional oil is required, remove the fill plug **(B)**.

Lubricant Type:
Mobil SHC 634

Capacity:
85 oz (2.5L)

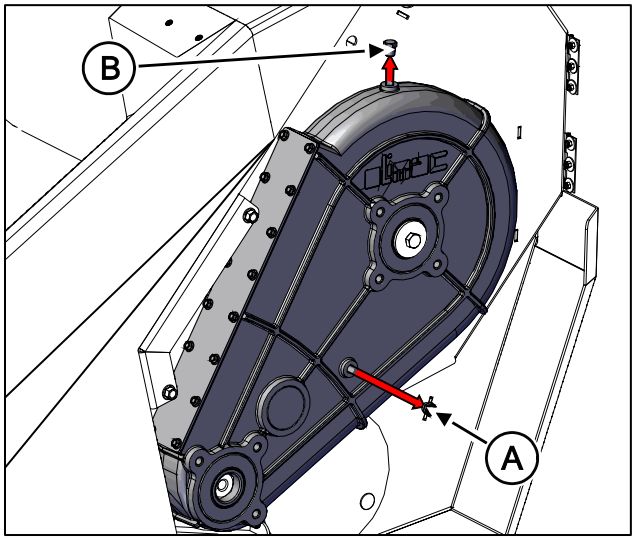

Row Unit Gearbox

Prior to seasonal operation inspect the oil level in the row unit gearbox. *Lower the corn head to operating position* and remove the dipstick **(A)** on each row. The oil should be between the maximum and minimum marks on the dipstick **(A)**.

Lubricant Type:
Mobil SHC 634

Capacity:
Non-Chopping: 98 oz (2.9L)
Single Chop: 179 oz (5.3L)
Twin Chop+: 193 oz (5.7L)

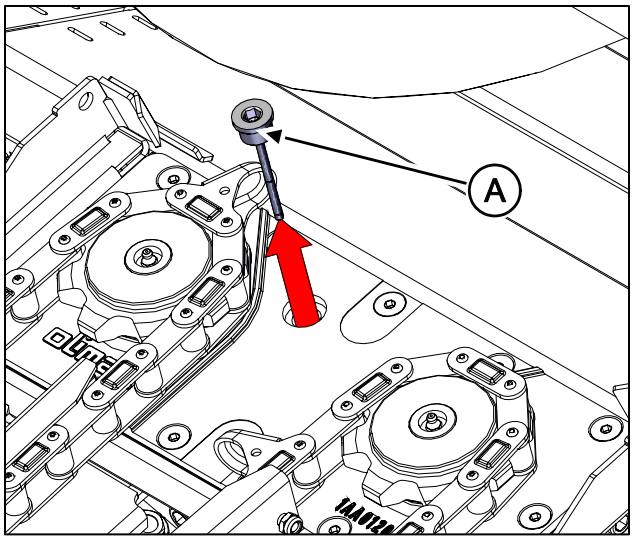

7.4.2 – Pre-Season Adjust/Inspect

Gathering Chain Tension

Prior to seasonal operation inspect the tension on the gathering chains **(A)**.

Inspecting:

1) Pull the gathering chain **(A)** outwards, at the location of the red arrow, until the tensioning fork **(B)** bottoms out.
2) Mark the tensioning fork **(B)** where it enters the gathering chain guide **(C)**.
3) Release the gathering chain and measure the distance between the mark made in Step 2 and the gathering chain guide **(C)**.
   a. Distance between the mark and the gathering chain guide should be 1/4" to 5/16" (6mm to 8mm).

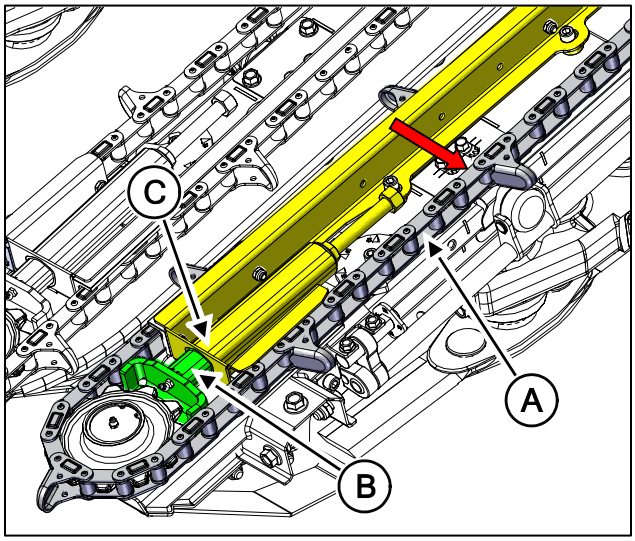

Adjusting:

1) Loosen the jamb nut **(D)**.
2) Tighten or loosen the tensioning bolt **(E).**
   a. Tighten = more chain tension
   b. Loosen = less chain tension
3) Re-check the gathering chain tension as outlined above.
4) Once the gathering chain tension is correct tighten the jamb nut **(D)**.

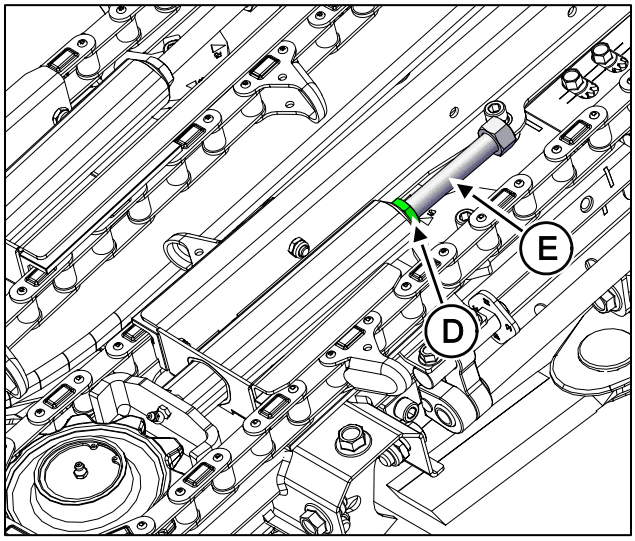

Stalk Roll Pinch Point

Prior to seasonal operation the gap between the stalk roller knives **(A)** should be checked to ensure correct operation. See Section 6.5.

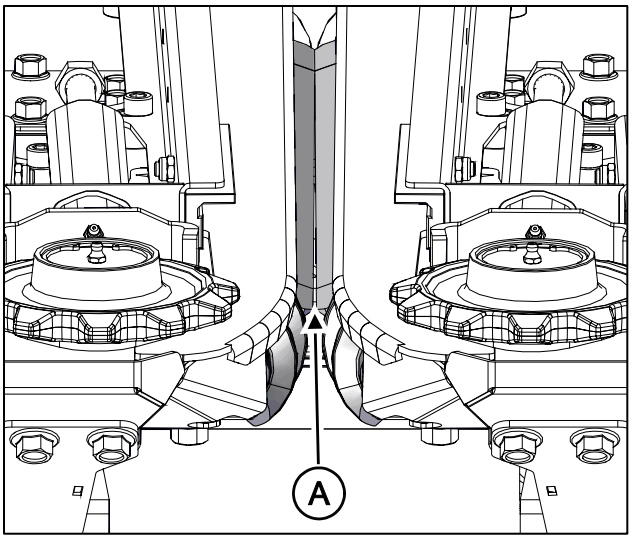

7.5 – Every 20 Hours of Operation

Danger: Before lubricating or performing maintenance on any part of the corn head, engage the feeder house lift cylinder safety stops, set the parking brake, turn off the combine engine and remove the key and hang a warning sign on the operator's platform. Failure to do so could result in serious injury or death.

7.5.1 – 20 Hour Grease/Lubricate

Stalk Rollers

Every 20 hours of operation lubricate the stalk roller lower bearings **(A)**. It is recommended to grease the corn head at the end of the day when the stalk rollers are warm. Fill until clean grease is seen pushing out of the stalk roller.

Lubricant Type:
Mobilux EP 0 Grease

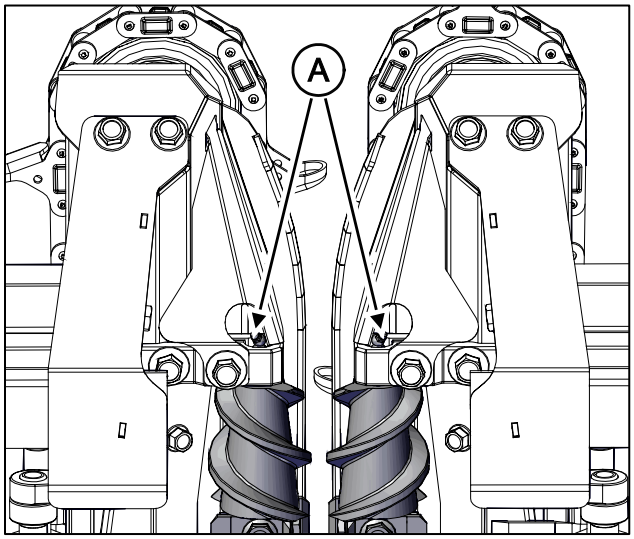

Folding Tow Shaft Coupler *(folding heads only)*

Every 20 hours of operation lubricate the folding tow shaft coupler **(A).**

Lubricant Type:
Mobilux EP 0 Grease

Important: Pump the grease into the zerks until it is seen leaking out. This coupler holds a significant amount of grease.

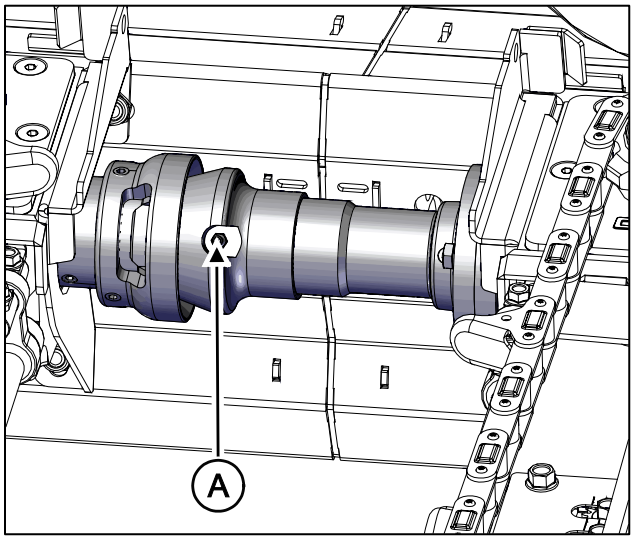

7.5.2 – 20 Hour Adjust/Inspect

Chopping Knives *(if equipped)*

Every 20 hours of operation inspect the rotating stalk chopper knives **(A).**

Inspecting:

Inspect the rotating chopping knives **(A) & (B)** for excessive wear or damage. If any damage is observed replace the blades in pairs only.

Important: Only replace broken or damaged knives in pairs to maintain proper balance. Failure to do so can cause damage to the chopping gearbox.

Important: On models equipped with Twin Chop+ the low speed rotating knives **(B)** are painted red and are shorter than the high speed rotating knives.

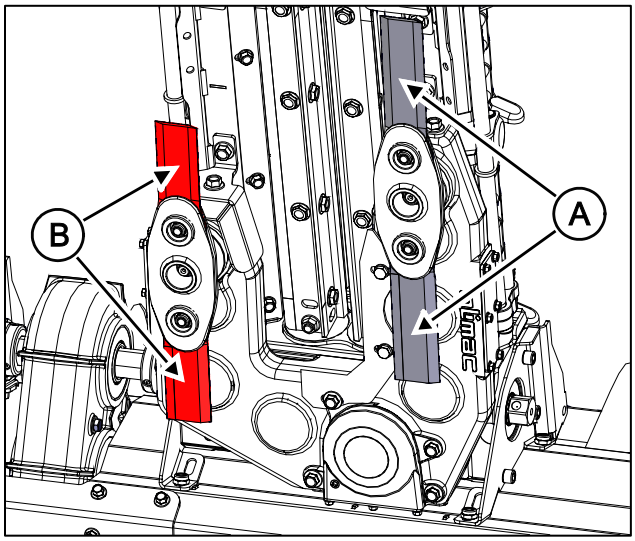

7.6 – Every 100 Hours of Operation

Danger: Before lubricating or performing maintenance on any part of the corn head, engage the feeder house lift cylinder safety stops, set the parking brake, turn off the combine engine and remove the key and hang a warning sign on the operator's platform. Failure to do so could result in serious injury or death.

20hr Service
Perform a 20hr Service. See section 7.5.

7.6.1 – 100 Hour Fluid Check

Intermediate Gearbox

Every 100 hours of operation inspect the oil level in the intermediate gearbox. *Raise the corn head completely* and remove the check plug **(A)**. The oil level should be at the check plug **(A)**. If additional oil is needed remove the breather **(B)**.

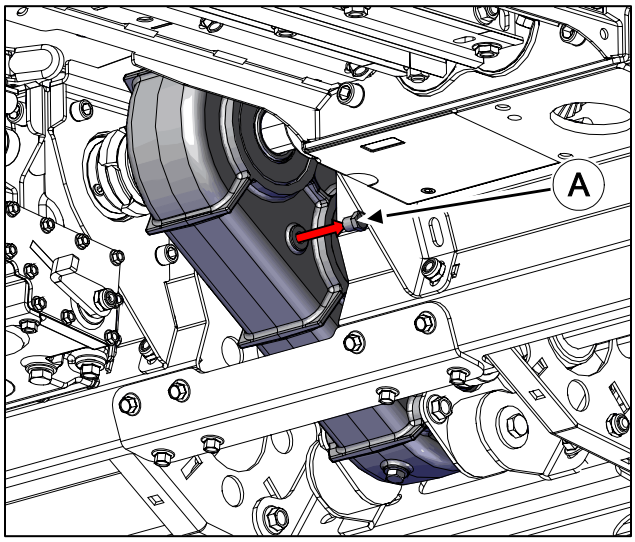

Lubricant Type:
Mobil SHC 634

Capacity:
47 oz (1.4L)

Danger: After raising the corn head engage the feeder house lift cylinder safety stops. Failure to do so could result in serious injury or death.

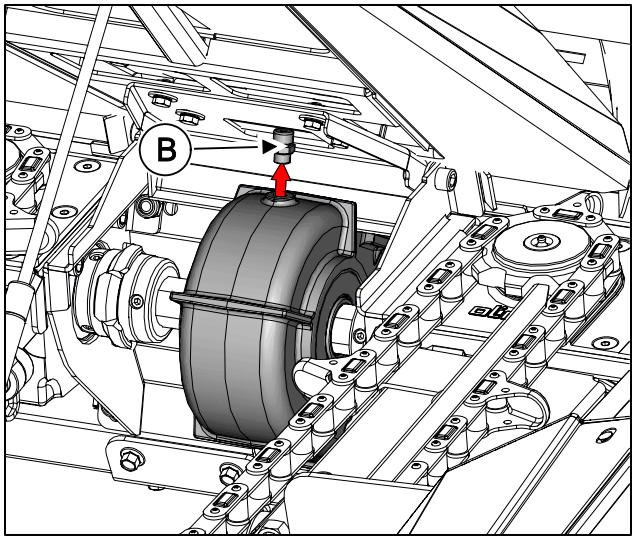

Row Unit Gearbox

Every 100 hours of operation inspect the oil level in the row unit gearbox. *Lower the corn head to operating position* and remove the dipstick **(A)** on each row. The oil should be between the maximum and minimum marks on the dipstick **(A)**.

Lubricant Type:
Mobil SHC 634

Capacity:
Non-Chopping: 98 oz (2.9L)
Single Chop: 179 oz (5.3L)
Twin Chop+: 193 oz (5.7L)

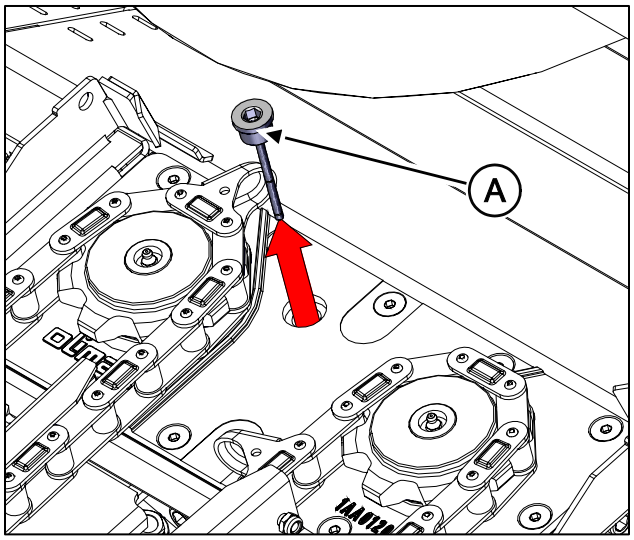

Heavy Duty Drive Gearbox

Every 100 hours of operation inspect the oil level in the heavy duty drive gearbox. *Raise the corn head to maximum height* and remove the check plug **(A)**. The oil level should be at the check plug **(A)** or slightly below. If additional oil is required, remove the breather **(B)** to fill.

Lubricant Type:
Mobil SHC 634

Capacity:
71 oz (2.1L)

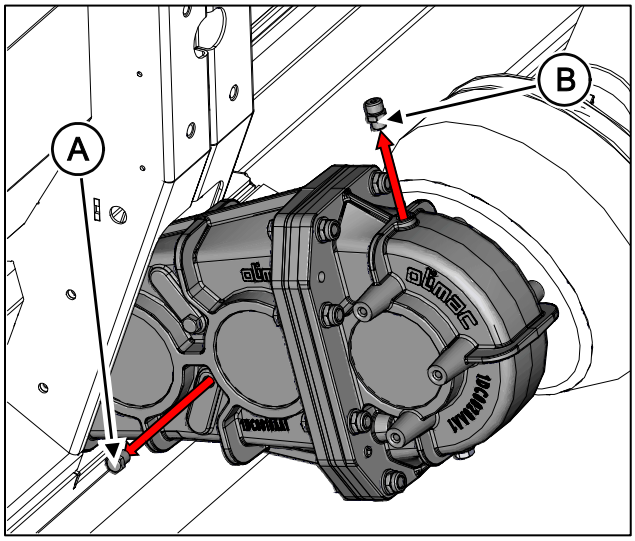

Step-up Gearbox *(if equipped)*

Some combine models require a step-up gearbox to prevent extreme PTO shaft angles. Every 100 hours of operation inspect the oil level. *Raise the corn head to maximum height* and remove the check plug **(A)**. The oil level should be at the check plug **(A)** or slightly below. If additional oil is required, remove the breather **(B)** to fill.

Lubricant Type:
Mobil SHC 634

Capacity:
71 oz (2.1L)

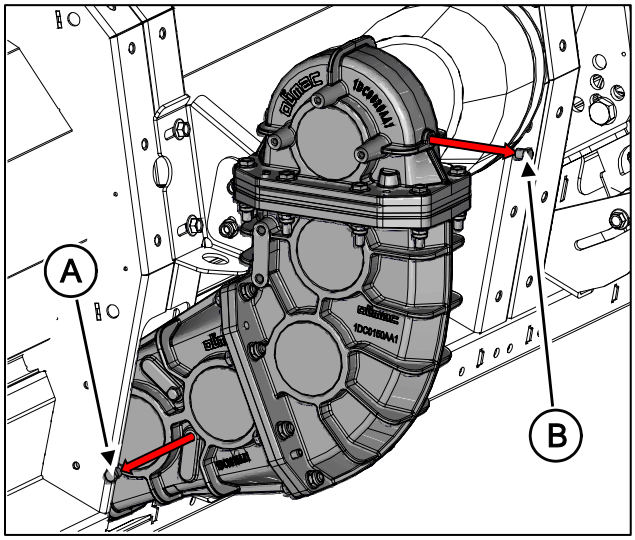

Auger Drive Gearbox

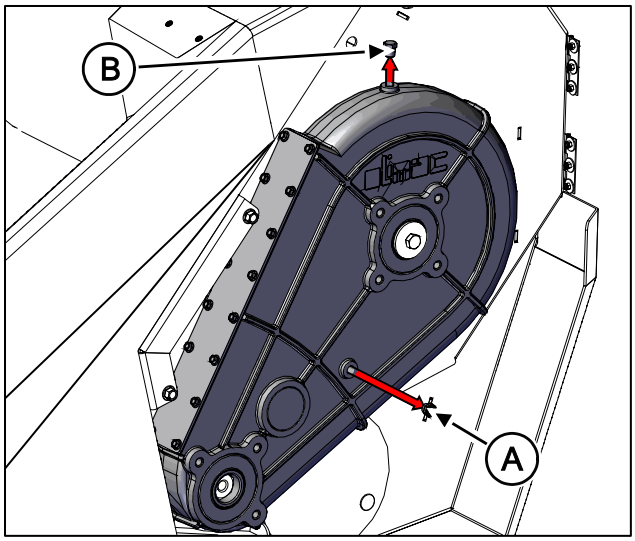

Every 100 hours of operation inspect the oil level in the auger drive gearbox. *Lower the corn head to operating height* and remove the check plug **(A)**. If additional oil is required, remove the fill plug **(B)**.

Lubricant Type:
Mobil SHC 634

Capacity:
85 oz (2.5L)

7.6.2 – 100 Hour Grease/Lubricate

Jackshaft Shaft Support Bearing

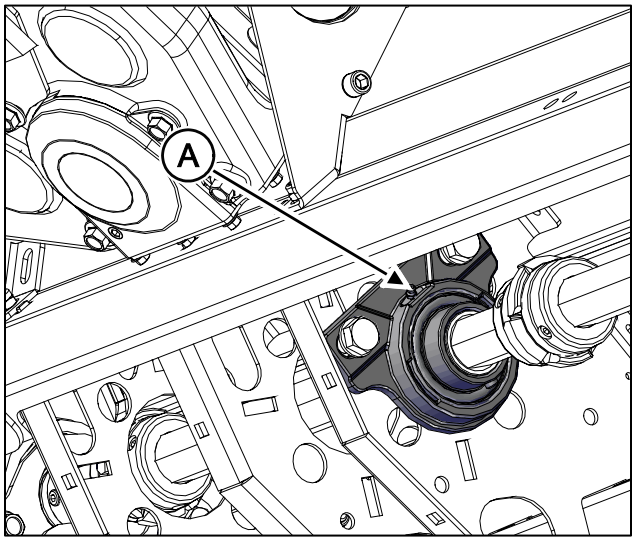

Every 100 hours grease the jackshaft shaft support bearing **(A)**. Fill until clean grease is seen leaking past the seal.

Lubricant Type:
Mobilux EP 0 Grease

Gathering Chain Tensioner

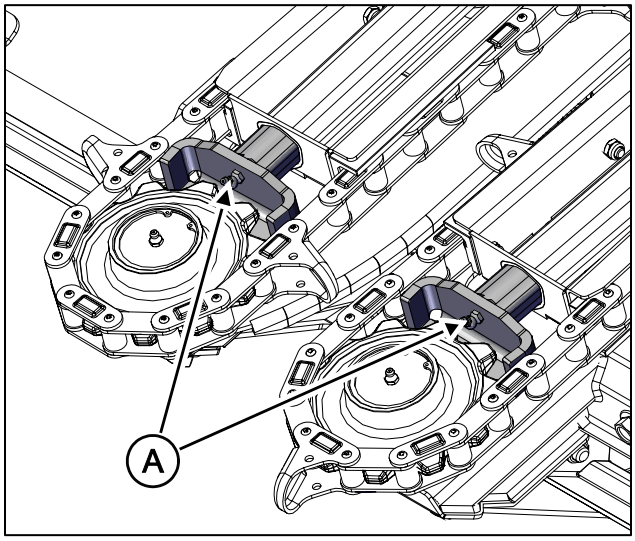

Every 100 hours grease the gathering chain tensioner **(A)**. Fill until clean grease is seen leaking around the tensioning tube.

Lubricant Type:
Mobilux EP 0 Grease

Gathering Chain Drive Sprocket

Every 100 hours of operation lubricate the gathering chain drive sprockets **(A).** Fill with 3/4 oz (20g) of grease.

Lubricant Type:
Mobilux EP 0 Grease

Important: Do not over grease. Failure to do so may result in damage to the row unit gearbox.

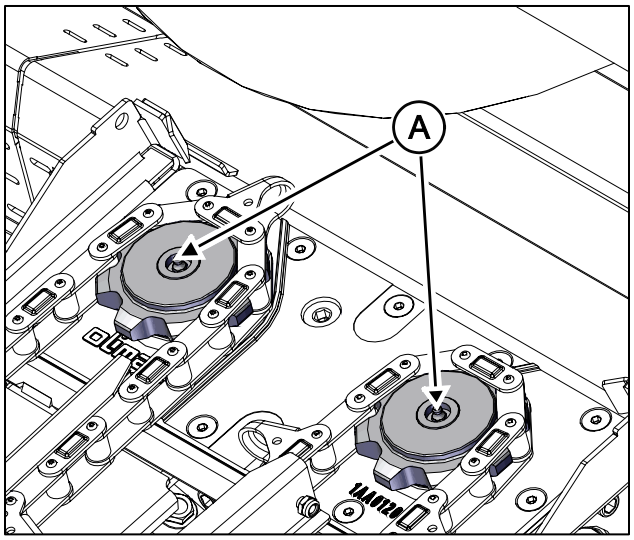

Gathering Chain Idler Sprocket

Every 100 hours of operation lubricate the gathering chain idler sprockets **(A)**. Fill until clean grease can be seen leaking from the cap.

Lubricant Type:
Mobilux EP 0 Grease

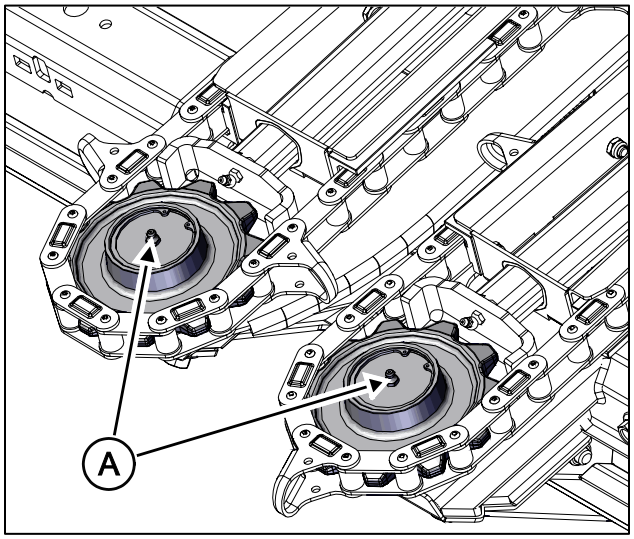

PTO Drive Shaft

Every 100 hours of operation lubricate the PTO shaft u-joints **(A)**, sliding shaft **(B)** and plastic shield bearings **(C)** on the PTO drive shaft every 50 hours of operation. Ensure the telescoping sliding portion of the shaft is free to move.

Lubricant Type:
Mobilux EP 0 Grease

Note: *The PTO shaft shields were removed in the first image for clarity.*

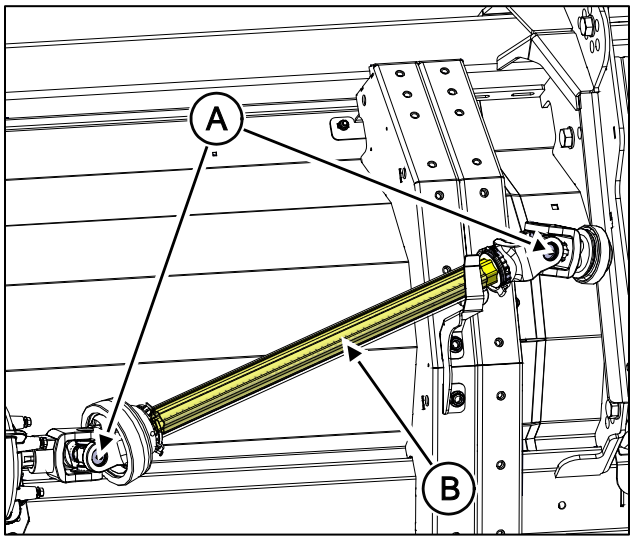

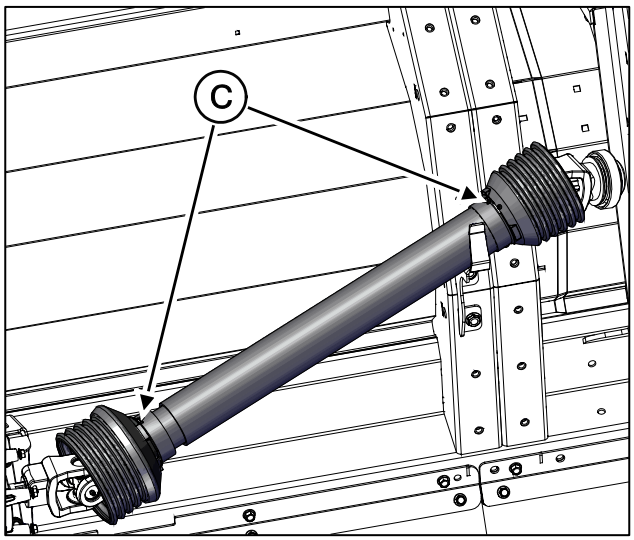

7.6.3 – 100 Hour Adjust/Inspect

Gathering Chain Tension

Every 100 hours of operation inspect the tension on the gathering chains **(A)**.

Inspecting:

1) Pull the gathering chain **(A)** outwards, at the location of the red arrow, until the tensioning fork **(B)** bottoms out.
2) Mark the tensioning fork **(B)** where it enters the gathering chain guide **(C)**.
3) Release the gathering chain and measure the distance between the mark made in Step 2 and the gathering chain guide **(C)**.
  b. Distance between the mark and the gathering chain guide should be 1/4" to 5/16" (6mm to 8mm).

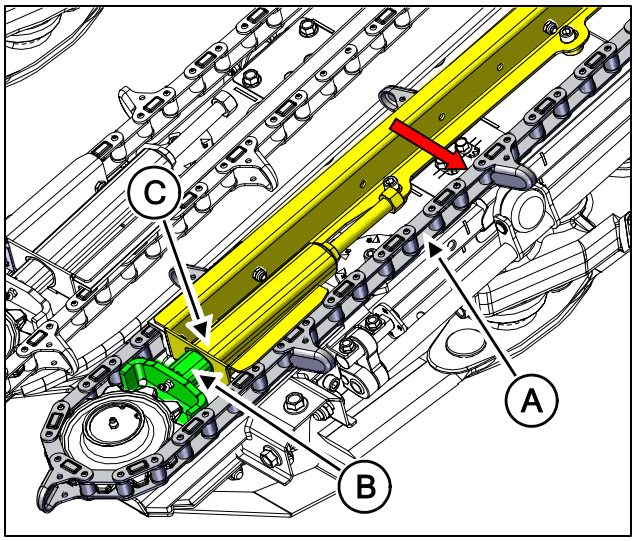

Adjusting:

1) Loosen the jamb nut **(D)**.
2) Tighten or loosen the tensioning bolt **(E).**
  a. Tighten = more chain tension
  b. Loosen = less chain tension
3) Re-check the gathering chain tension as outlined above.
4) Once the gathering chain tension is correct tighten the jamb nut **(D)**.

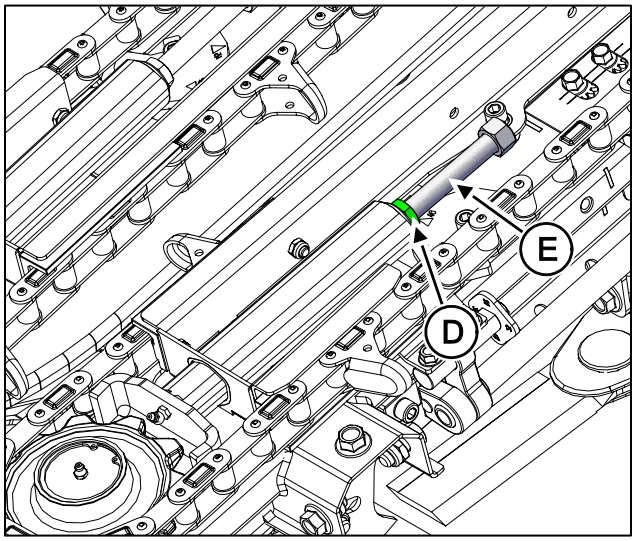

Clean Deck Plates

Every 100 hours of operation blow compressed air between the deck plates **(F)** and the row unit frame to remove any buildup of material. This prevents the loss of functionality of the deck plate shocks.

Note: *The gathering chains, chain guides, and chain tensioners were removed in the picture for clarity. They do not need to be removed to clean the deck plates.*

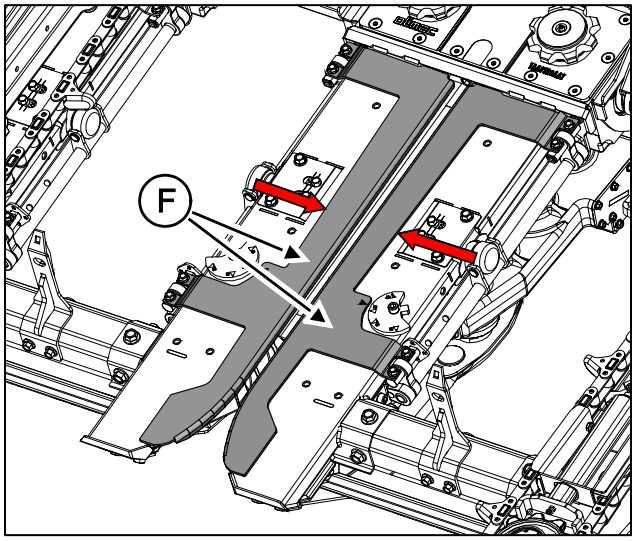

7.7 – Every 250 Hours of Operation or Annually

Danger: Before lubricating or performing maintenance on any part of the corn head, engage the feeder house lift cylinder safety stops, set the parking brake, turn off the combine engine and remove the key and hang a warning sign on the operator's platform. Failure to do so could result in serious injury or death.

Important: Because the corn head uses full synthetic oils it is not required to change these fluids. It is only required to add oil to maintain the correct levels.

20hr Service

Perform a 20hr Service. See section 7.5.

100hr Service

Perform a 100hr Service if doing end of season maintenance. See section 7.6.

7.7.1 – 250 Hour or Annually Grease/Lubricate

Gathering Chain Lubrication

Danger: Never lubricate gathering chains with the corn head, base unit components, or combine engine running.

Important: When operating in down corn do not lubricate the gathering chains to avoid dirt ingress into the chain.

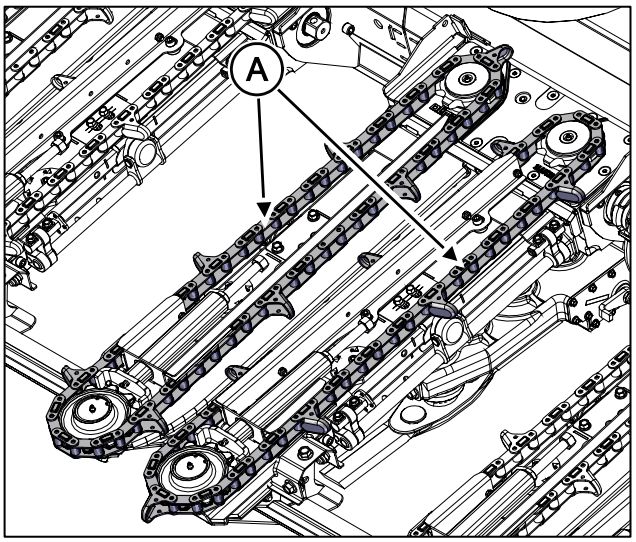

Every 250 hours, or annually, lubricate the gathering chains **(A)**. It is recommended to run the chains for a few minutes before lubricating to aid in oil penetration between the internal pivot pins and bushings.

Lubricant Type:
SAE 30W Motor Oil

Folding Joints

Lubricate the folding joints **(A)** on the frame casting every 250 hours, or annually. This is only required on folding heads. Fill until clean grease can be seen leaking around the pin.

Lubricant Type:
Mobilux EP 0 Grease

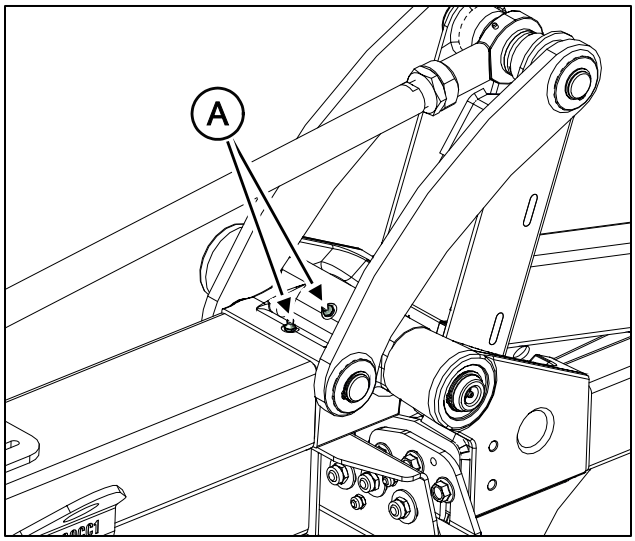

Lubricate the folding joints **(B)** on the lower main pivot arm every 250 hours, or annually. This is only required on folding heads. Fill until clean grease can be seen leaking around the pin.

Lubricant Type:
Mobilux EP 0 Grease

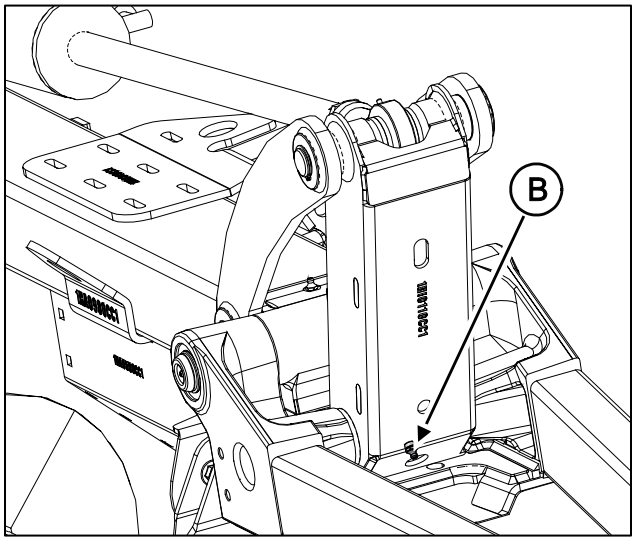

Lubricate the folding joints **(C)** on the main pivot pin every 250 hours, or annually. This is only required on folding heads. Fill until clean grease can be seen leaking around the pin.

Lubricant Type:
Mobilux EP 0 Grease

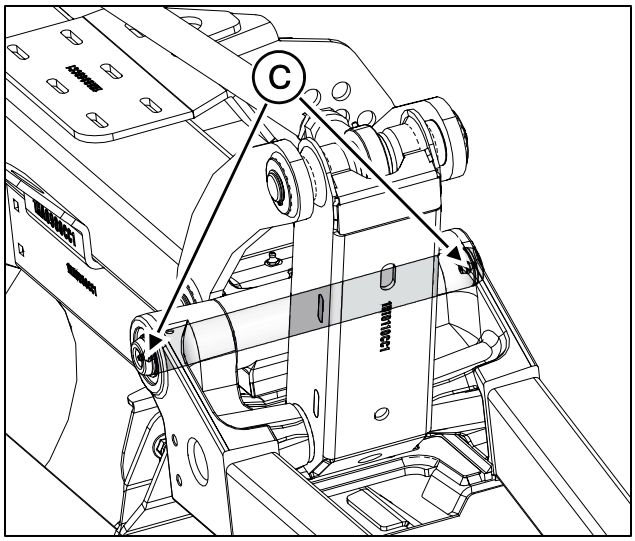

Cross Auger Slip Clutch

Lubricate the cross auger slip clutch **(D)** every 250 hours, or annually. All corn heads with single augers have one clutch on the left side of the corn head. All corn heads with dual or split augers have a slip clutch on both the right and left sides of the corn head. Fill with 1 oz to 1 1/2 oz (30g to 40g) of grease.

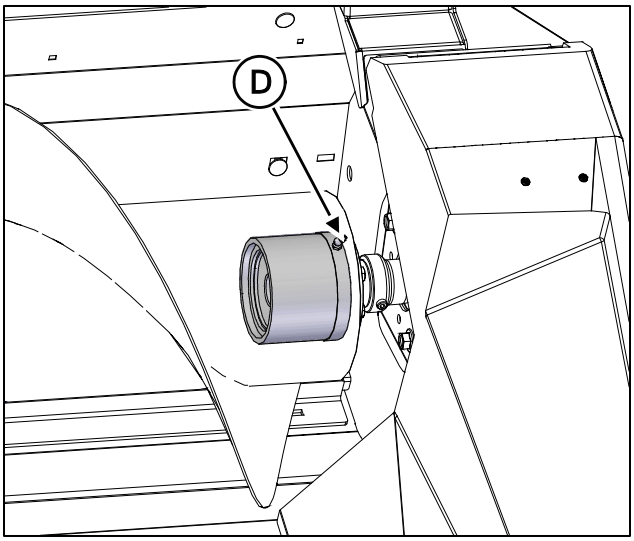

Lubricant Type:
Mobilux EP 0 Grease

Important: Do not over grease. Failure to do so may result in damage to the row unit gearbox.

7.7.2 – 250 Hour or Annually Adjust/Inspect

Gathering Chain Wear Guides

Every 250 hours, or annually, inspect the wear guides **(A)** for wear. If any excessive wear is observed, replace them. Each chain has a total of three wear guides.

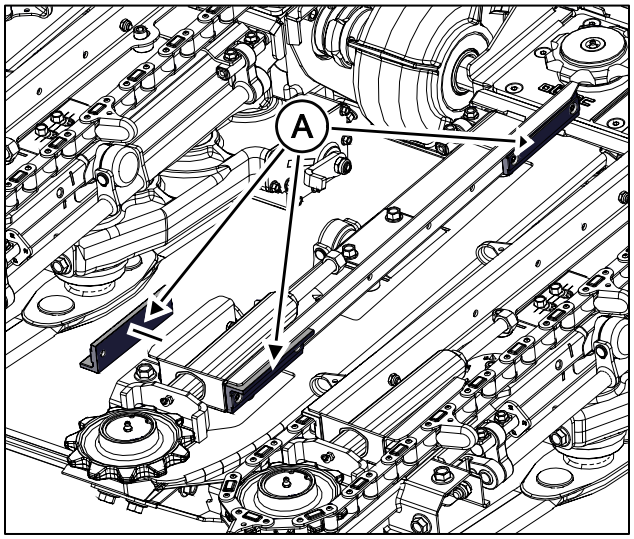

Inspecting:

Inspect the gathering chain wear guides for appropriate thickness, especially at the edges where the gathering chain enters and exits the wear guide. If any excessive wear is observed the wear pad should be replaced. Each gathering chain has three wear guides.

Section 8 – Troubleshooting

The majority of corn head operating problems can be traced to either improper adjustments or configurations. The following troubleshooting chart will help when problems develop by suggesting a possible cause and the recommended solution. Make certain when trying to solve a problem that the source is not coming from some place other than where the problem exists.

To aid in setting corn head speed, a gear/sprocket selection chart is available from your Authorized Drago Dealer.

8.1 – Troubleshooting

Problem	Possible Cause	Solution
Loss of ear corn in the field from the front of the corn head	Incorrect corn head angle	Adjust the corn head angle. See Section 6.1. Recommended corn head angle: • ***17° to 23° Non-chopping Heads*** • ***21° to 23° Chopping Heads***
	Corn head speed too high	Decrease corn head speed by changing the gear ratio, or by slowing the combine's variable feeder drive (if equipped). The ear should be harvested by midway up the stalk roller. *Recommended* ***jackshaft*** *speed:* ***630-700rpm.***
	Ground speed too low	Increase forward travel speed of the combine.
	Harvesting on steep slopes	Install ear savers.
Losing ears over sides of the corn head	Down or lodged corn	Add tall corn attachment or down corn augers.
Difficult feeding in dry conditions	Incorrect corn head angle	Adjust the corn head angle. See Section 6.1. Recommended corn head angle: • ***17° to 23° Non-chopping Heads*** • ***21° to 23° Chopping Heads***
	Front feeder house drum not in corn position	Raise front feeder house drum to corn position. See Combine Operators Manual.
	Feeder drum blocks not installed (Case IH only)	Install optional front feeder drum stop blocks.
	Corn head speed too high	Decrease corn head speed by changing the gear ratio, or by slowing the combine's variable feeder drive (if equipped). The ear should be harvested by midway up the stalk roller. *Recommended* ***jackshaft*** *speed:* ***630-700rpm.***
	Corn head speed too low	Increase the corn head speed by changing the gear ratio, or by speeding up the combine's variable feeder drive (if equipped). The ear should be harvested by midway up the stalk roller. *Recommended* ***jackshaft*** *speed:* ***630-700rpm.***
	Ear savers installed	Remove or flip ear savers.
	Stalk roller gap too large	Adjust the stalk rollers to a more aggressive position. See Section 6.3.3.
	Install aggressive gathering chains	Install aggressive gathering chains on the center 4 rows.

Problem	Possible Cause	Solution
Front plugging	Loose gathering chains	Adjust gathering chain tension. See Section 6.7.1.
	Incorrect corn head angle	Adjust the corn head angle. See Section 6.1. Recommended corn head angle: • ***17° to 23° Non-chopping Heads*** • ***21° to 23° Chopping Heads***
Ear shelling at stalk roller knives	Corn head speed too low pulling ear through the deck plates	Increase the corn head speed by changing the gear ratio, or by speeding up the combine's variable feeder drive (if equipped). The ear should be harvested by midway up the stalk roller.
	Corn head speed too high	Decrease corn head speed by changing the gear ratio, or by slowing the combine's variable feeder drive (if equipped). The ear should be harvested by midway up the stalk roller. *Recommended* ***jackshaft*** *speed:* ***630-700rpm.***
	Stalk roller knives worn	Adjust stalk roller knife clearance. See Section 6.3.2 & 6.5.
	Row unit spread	Check row unit alignment. See Section 6.5.
	Worn deck plates	Replace deck plates.
	Deck plates not properly adjusted	Check adjustment. See Section 6.6.
Too many stalks entering combine (fluff)	Corn head speed too high	Decrease corn head speed by changing the gear ratio, or by slowing the combine's variable feeder drive (if equipped). The ear should be harvested by midway up the stalk roller. *Recommended* ***jackshaft*** *speed:* ***630-700rpm.***
	Corn head speed too low	Increase the corn head speed by changing the gear ratio, or by speeding up the combine's variable feeder drive (if equipped). The ear should be harvested by midway up the stalk roller. *Recommended* ***jackshaft*** *speed:* ***630-700rpm.***
	Stalk roller knives worn	Adjust or replace stalk roller knife clearance. See Section 6.3.2 & 6.5.
	Incorrect corn head angle	Adjust the corn head angle. See Section 6.1. Recommended corn head angle: • ***17° to 23° Non-chopping Heads*** • ***21° to 23° Chopping Heads***
	Ear savers installed	Remove or flip ear savers.
	Stalk roller gap too large	Adjust the stalk rollers to a more aggressive position. See Section 6.3.3.
	Install aggressive gathering chains	Install aggressive gathering chains on the center 4 rows.
Horsepower consumption too high	Stalk choppers installed	Power consumption is higher with choppers installed.
	Stalk chopper knives worn	Flip/Replace stalk chopper knives. Always replace in pairs.
	Incorrect corn head angle	Adjust the corn head angle. See Section 6.1. Recommended corn head angle: • ***17° to 23° Non-chopping Heads*** • ***21° to 23° Chopping Heads***

Problem	Possible Cause	Solution
Poor stalk chop quality	Incorrect corn head angle	Adjust the corn head angle. See Section 6.1. Recommended corn head angle: • ***17° to 23° Non-chopping Heads*** • ***21° to 23° Chopping Heads***
	Corn head speed too low	Increase the corn head speed by changing the gear ratio, or by speeding up the combine's variable feeder drive (if equipped). The ear should be harvested by midway up the stalk roller. *Recommended* ***jackshaft*** *speed:* ***630-700rpm.***
	Stalk chopper knives worn	Flip/Replace stalk chopper knives. Always replace in pairs.
	Ground speed too high	Decrease forward travel speed of the combine.
Damaging Snouts	Incorrect corn head angle	Adjust the corn head angle. See Section 6.1. Recommended corn head angle: • ***17° to 23° Non-chopping Heads*** • ***21° to 23° Chopping Heads***
	Snouts set under the center pivot line	Adjust the snout angle. See Section 6.2.1.
	Wear point too aggressive	Install the front of the bubble tips between the rear of the wear point and the snout.
Trash wrapping around stalk rollers	Stalk roller knives worn	Adjust or replace stalk roller knife clearance. See Section 6.3.2 & 6.5.
	Stalk roller trash knife not properly adjusted	Adjust stalk roller trash knife clearance. See Section 6.4.
	Stalk roller gap too large	Decrease the stalk roller gap. See Section 6.3.3.

Section 9 – Specifications

9.1 – Corn Head Specifications

Important: All weights and widths listed below are approximate and will change depending on options added to the corn head.

RIGID HEADS						
MODEL	NUMBER OF ROWS	ROW SPACING (CM)	NON-CHOPPING (KG)	SINGLE CHOP (KG)	TWIN CHOP (KG)	TRANSPORT WIDTH (M)
4F70-GT	4	70	1415	1500	1570	3,20
4F75-GT	4	75	1455	1540	1610	3,20
5F70-GT	5	70	1780	1890	1980	3,92
5F75-GT	5	75	1820	1930	2020	3,92
5F80-GT	5	80	1860	1970	2060	4,12
6F70-GT	6	70	2060	2190	2290	4,42
6F75-GT	6	75	2110	2240	2330	4,72
6F80-GT	6	80	2150	2280	2370	4,92
8F70-GT	8	70	2740	2920	3050	5,82
8F75-GT	8	75	2800	2980	3110	6,24
8F80-GT	8	80	2850	3030	3160	6,52
10F70-GT	10	70	-	-	-	7,22
10F75-GT	10	75	-	-	-	7,76
12F50,8-GT	12	50,8	-	-	-	6,50
12F55,8-GT	12	55,8	-	-	-	7,05
12F70-GT	12	70	4020	4280	4480	8,62
12F75-GT	12	75	4080	4340	4540	9,27
12F80-GT	12	80	4140	4400	4600	9,72
16F70-GT	16	70	-	-	-	11,42
16F75-GT	16	75	-	-	-	12,32
18F50,8-GT	18	50,8	-	-	-	9,55
18F55,8-GT	18	55,8	-	-	-	10,40
18F70-GT	18	70	-	-	-	12,82
18F75-GT	18	75	-	-	-	13,84

FOLDING HEADS						
MODEL	NUMBERS OF ROWS	ROW SPACING (M)	NON-CHOPPING (KG)	SINGLE CHOP (KG)	TWIN CHOP (KG)	TRANSPORT WIDTH (M)
6FR70-GT	6	70	2560	2690	2800	4,42
6FR75-GT	6	75	2560	2690	2800	4,72
6FR80-GT	6	80	2600	2730	2840	4,92
8FR70-GT	8	70	3140	3310	3450	5,82
8FR75-GT	8	75	3180	3350	3490	6,24
8FR80-GT	8	80	3220	3390	3530	6,52
9FR70-GT	9	70	3440	3630	3780	6,52
9FR75-GT	9	75	3480	3670	3820	6,92
10FR70-GT	10	70	-	-	-	7,22
10FR75-GT	10	75	4020	4240	4420	7,76
10FR80-GT	10	80	-	-	-	8,12
12FR70-GT	12	70	-	-	-	8,62
12FR75-GT	12	75	4440	4700	4910	9,27
12FR80-GT	12	80	-	-	-	9,72
16FR70-GT	16	70	-	-	-	11,42
16FR75-GT	16	75	-	-	-	12,32

9.2 – Bolt Torques

Standard Bolt Torque

SAE			
Bolt Diameter (inches)	**LbFt**	**Nm**	**Class**
1/4	10	13	SAE - 5 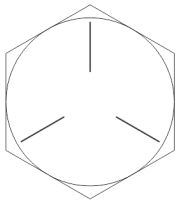
5/16	20	27	
3/8	35	47	
7/16	56	76	
1/2	85	116	
9/16	123	167	
5/8	170	231	
3/4	302	410	
1/4	14	18	SAE - 8 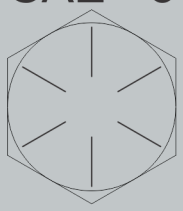
5/16	28	38	
3/8	49	67	
7/16	79	107	
1/2	121	164	
9/16	174	236	
5/8	240	326	
3/4	426	578	
Metric			
Bolt Diameter (mm)	**LbFt**	**Nm**	**Class**
4	2.6	3.5	8.8 
5	5.2	7.0	
6	8.7	11.8	
8	21.3	28.8	
10	42.3	57.3	
12	74	100	
14	117	159	
16	183	248	
8	30.5	41.3	10.9 
10	60.3	81.8	
12	105	143	
14	168	227	
16	261	354	

10 - List of Reference Regulations

This corn head has been manufactured in accordance with the 2006/42/CE machinery directive.

11 - Disposal

Dispose of this machine and its components in accordance with the regulations in force and by separating appropriately the materials.

Take all adequate precautions to prevent the disposal of oils present in the machine in the environment since they are highly polluting; follow the procedures complying with the rules of law that regulate disposal.

12 - Copy of the EC Declaration of Conformity

A copy of the EC declaration of conformity follows, as drafted by the manufacturer.